SHARPLES
TREE
SERVICES

An Arboricultural Method Statement on Trees at

13 Buryfields
Lydiard Millicent
Swindon
SN5 3NF

16th April 2026

Prepared for Mr R Huntington

Prepared by Mark Sharples BSc, Tech Cert (Arbor.A.), Dip Arb (RFS), MArborA.

Contents

		Page
1	INTRODUCTION	3
2	SITE VISIT AND OBSERVATIONS	4
3	TREE CONSTRAINTS PLAN	4
4	ARBORICULTURAL IMPACT ASSESSMENT	5
5	ARBORICULTURAL METHOD STATEMENT	5, 6
6	OTHER CONSIDERATIONS	6
7	REFERENCES	7

Appendices

1	Tree Schedule and Explanatory Notes	8, 9
2	British Standard Cascade Chart	10
3	Tree Protective Fencing Specification	11, 12
4	Fence Signage	13, 14
5	Arboricultural Association Guidance Note 12	15, 16

Figures

1	Tree Constraints Plan	13B/TCP
2	Tree Protection Plan	13B/TPP

1 INTRODUCTION

1.1 Brief: I am instructed by Mr Richard Huntington, the property owner, to inspect the trees with the potential to be affected by development at 13 Buryfields, Lydiard Millicent, Swindon SN5 3NF and to provide an arboricultural report.

1.2 Qualifications and Experience: I have based this report on my site observations and the provided information, and I have come to my conclusions in the light of my qualifications and my 27 years experience in the arboricultural industry. I have the following qualifications in arboriculture, City and Guild's Tree Surgery, Technicians Certificate in Arboriculture (Arboricultural Association) and Professional Diploma in Arboriculture (Royal Forestry Society).

1.3 Documents and Information Provided: Mr Huntington provided me with copies of the following documents.

- A location plan
- A proposed site plan
- A proposed floorplan
- Several elevations

1.4 Relevant Background Information: During a telephone conversation with my assistant, Katie Sharples, Mr Huntington advised us that following a planning application, PL/2025/05455, a tree survey was required by the planning department.

1.5 Scope of this Report: This report is only concerned with a tree assessment based on the criteria in the British Standard 5837 Trees in relation to design, demolition and construction 2012. It includes a preliminary assessment based on a site visit and the documents provided, listed in 1.3 above. Trees and shrubs are living organisms whose health and condition can change rapidly, conclusions and recommendations are only valid for a period of one year. These periods of validity may be reduced in the case of any change in conditions in proximity to the trees or built structures.

1.6 Limitations of Use and Copyright: All rights in this report are reserved. No part of it may be reproduced or transmitted, in any form or by any means, electronic, mechanical, photocopying, recording or otherwise, or stored in any retrieval system of any nature, without the written permission of Sharples Tree Services. Its content and format are for the exclusive use of the addressee in dealing with this site. It may not be sold, lent, hired out or divulged to any third party not directly involved in this site without our written consent.

2 SITE VISIT AND OBSERVATIONS

2.1 **Site Visit:** My assistant, Katie Sharples, and I carried out an unaccompanied site visit on 16th April 2026. All observations are from ground level without detailed investigations, I visually inspected the significant trees using binoculars to examine the aerial parts, a nylon faced sounding hammer and a thin metal probe to test external tissue resistance. I measured all dimensions unless otherwise indicated. I had access to trees outside the boundary and was able to inspect them in same way as the trees in the site. The weather at the time of the inspection was overcast with good visibility.

2.2 **Brief Site Description:** Buryfields is a quiet residential cul-de-sac in the village of Lydiard Milicent. The property consists of a semi detached dwelling set to front corner of the plot. The house is of Cotswold stone block construction with an interlocking clay tile roof. There is not a garage. There is a large gravel entrance drive and turning area at the side of the house leading to the rear garden. The principal garden areas are to the rear of the building, there is a small garden area to the front, the rear is more private with wooden fences and walls enclosing it. The general nature of the locality is medium density residential and the property is typical of others in the vicinity. The garden areas and adjacent properties contain a variety of maturing and mature trees and shrubs.

2.3 **Tree Identification and Observations:** I visually inspected the trees with the potential to be affected and recorded the information on the Tree Schedule included as Appendix 1. The trees are categorised according to the cascade chart, Table 1 in the British Standard 5837 included as Appendix 2.

2.4 **Location of the Trees**: I have illustrated the locations of the trees with the potential to be affected on the Tree Constraints Plan, drawing number 13B/TCP. The plan is for illustrative purposes only and it should not be used for directly scaling measurements. All the relevant information is contained within this report and the provided documents.

3 TREE CONSTRAINTS PLAN

3.1 **Drawing:** The included Tree Constraints Plan, 13B/TCP, illustrates the above and below ground constraints that the trees pose to the development.

3.2 **Root Protection Area (RPA):** These are calculated in accordance with the criteria in annex C and D of the British Standard 5837 *Trees in relation to design, demolition and construction 2012*. The table calculates the radius of a circular area of soil to be protected prior to the commencement of any works in order to ensure the trees long term survival, adjustments can be made to this according to the soil topography and pre-existing soil conditions.

3.3 **Canopy Spread:** This is measured at the 4 cardinal compass points and plotted accordingly.

4 ARBORICULTURAL IMPACT ASSESSMENT

4.1 **Tree Removal:** It is proposed to remove Trees 3-5, they are all of poor quality with limited lifespans, their loss will be mitigated with the planting of 3 standard fruit trees.

4.2 **Neighbouring Retained Trees:** Trees 1 and 2, a Deodar Cedar and a Copper Beech, are growing in the neighbouring property to the south, 14 Buryfields. They have been included in this report as they have the potential to be impacted by the proposals. Their location and size mean that their roots and canopies cross into the garden of 13 Buryfields. The proposed property is outside of the RPA's of both trees, however they are immediately in front of the proposed property, this area is currently laid to rough gravel but could be used for construction access. The proposals indicate new parking spaces for the proposed property within the RPA's of both trees, if the construction of these parking spaces were to follow the typical method of soil excavation and replacement with compacted stone there is the possibility of root severance during excavation. In addition to this construction access and construction activities in this area have the potential to damage the soil structure and tree canopy. The trees will be protected according to the methods in the arboricultural method statement to minimise the impact on the trees.

5 ARBORICULTURAL METHOD STATEMENT

5.1 **Tree Protection Plan:** The included Tree Protection Plan, 13B/TPP, is designed to minimise the effects of the development and ensure that the trees to be retained will have an adequate volume of soil for future survival and growth. Areas requiring specific protection measures are hatched and labelled on the plan and detailed in **5.2.5.**

5.2 **Tree Protection Measures**: To be carried out in order listed:-

5.2.1 **Fencing Specification and Location:** Tree Protective Fencing is to be erected prior to any site clearance, demolition or construction works in accordance with the specification in British Standard 5837, included as Appendix 3. The location of the fencing is illustrated on the Tree Protection Plan, 13B/TPP. The fencing will be signed and regarded as sacrosanct and will not be removed or altered without approval by the project Arboriculturalist, fence signage is included as Appendix 4. Barriers should consist of a scaffold framework in accordance with Appendix 3, diagram 1, comprising a vertical and horizontal framework, well braced to resist impacts, with vertical tubes spaced at a maximum interval of 3m. Onto this, weld mesh panels should be securely fixed with wire or scaffold clamps. Several of the fence locations indicated are on existing hard surfacing so the above specification will be inappropriate, in these areas fencing as specified in Appendix 3, diagram 2 should be used.

5.2.2 Restrictions Within RPA's: Inside the protection area of the fencing the following shall apply:-

- No mechanical excavation other than by methods specified in **5.2.5**.
- No excavation by any other means without arboricultural site supervision.
- No lowering of levels for any purpose.
- No storage of plant or materials.
- No storage or handling of any chemical including cement washings.
- No vehicular access.
- No fire lighting.

5.2.3 Additional Precautions: In addition to the above, further precautions are necessary adjacent to trees:-

- A 10m separation distance shall be observed between the trees and substances injurious to tree health, including fuels, oil, bitumen, cement (including cement washings), builders sand, concrete mixing and other chemicals.
- No fire shall be lit such that flames come within 5m of tree foliage.

5.2.4 Fence Removal: Tree Protective Fencing will only be removed upon completion of all building construction works and the parking spaces within the RPA's of Trees 1 and 2 can be constructed

5.2.5 No-Dig Driveway: The areas of the RPA's of Trees 1 and 2 that will be used as driveway and parking spaces, will be protected by the Tree Protective Fencing for the duration of construction. The area of driveway marked on the Tree Protection Plan, 13B/TPP, will be constructed according to the methods detailed in Arboricultural Association Guidance Note 12 detailed in Appendix 5.

5.3 Cranes: If the use of cranes is necessary they shall be sited so as that no part of the boom, jib or load will swing over the Tree Protective Fencing.

5.4 Services: There will be no installation of services either above or below ground in the RPA's.

5.5 Mitigation Planting: To mitigate for the loss of trees, 3 fruit trees will be planted in the locations marked on the Tree Protection Plan, 13B/TPP.

5.6 Future Considerations: The remaining trees should be inspected on a regular basis by a qualified Arboriculturalist.

6 OTHER CONSIDERATIONS

6.1 Trees Subject to Statutory Controls: According to Wiltshire Council online planning map there are no Tree Preservation Orders on any of the trees surveyed and you are not located in a conservation area.

7 REFERENCES

British Standard 5837 Trees in relation to design, demolition and construction – recommendations 2012

Tree Roots in the Built Environment by John Roberts, Nick Jackson & Mark Smith

Principles of Tree Hazard Assessment by D Lonsdale 1999

Diagnosis of Ill-Health in Trees by R G Strouts & T G Winter 1994

British Standard 3998 – Recommendations for tree work 2010

Arboricultural Association Guidance Note 12

Mark Sharples BSc, Tech Cert (Arbor.A.), Dip Arb (RFS), MArborA.
For Sharples Tree Services

APPENDIX 1

Tree Schedule

Tree No.	Species	Height (m)	Dia @ 1.5m (mm)	Crown Spread (m)				Height of Crown Clearance (m)	Maturity	Structural Condition	Estimated Remaining Contribution	BS 5837 Category Grading	RPA Radius
				N	E	S	W						
1	Deodar Cedar *Cedrus deodara*	10	480	5	3	3	5	2	Early Mature	Neighbouring tree	10-20	B/C1	5.8
2	Copper Beech *Fagus sylvatica* 'Purpurea'	14	880	7	6	6	6	5	Medium Mature	Neighbouring tree. Previously pruned.	20-40	B1	10.6
3	Apple *Malus domestica* sp	4	240	1	1	1	1	3	Medium Mature	One side of canopy dead. Several decay pockets. Very low vitality.	<10	U	2.9
4	Holly *Ilex aquifolium*	6	160	2	2	2	2	2	Early Mature		20-40	B/C1	1.9
G5	2 x Hawthorn *Crataegus monogyna*	7	ave 250	3	3	3	3	3	Medium Mature	Swamped in dense Ivy	10-20	C2	3.0

APPENDIX 1

Tree Schedule Explanatory Notes

- **Measurements:** All dimensions are measured unless otherwise indicated. Measurements are taken with a tape or digital clinometer.

- **Tree Number:** All surveyed trees are numbered and their locations are mapped on the Tree Constraints Plan included as 13B/TCP. Where there are several trees of similar size and species growing together I have inspected all of them and as the information pertaining to them is very similar I have recorded them as a group.

- **Species:** The species identification is based on visual observations and the common English name of what the tree appeared to be is listed first, with the botanical name in italics.

- **Height:** Height is measured with a digital clinometer and rounded to the nearest metre.

- **Dia @ 1.5m:** Diameter at 1.5m above ground level and is recorded in millimetres. Diameter is measured with a diameter tape. 'ms' indicates trees or shrubs with multiple stems at 1.5m, the number of stems and their corresponding diameters are recorded in the observations.

- **Crown Spread:** Crown spread is measured in metres and is a maximum radial measurement in the four cardinal points.

- **Crown Clearance**: The height in metres of crown clearance above adjacent ground level.

- **Maturity:**
  - Semi-mature = less than one third life expectancy
  - Early-mature = one third to two thirds life expectancy
  - Medium-mature = last one third of life expectancy
  - Over-mature = older than the average life expectancy for the species

- **Estimated Remaining Contribution:** The estimated number of years left that a tree can safely contribute to the amenity of the site.

- **BS5837 Category Grading:** The trees are categorised according to the cascade chart, Table 1 in the British Standard 5837 included as Appendix 2.

- **RPA Radius:** The radius in metres of the Root Protection Area as calculated by the table in Annex D of The British Standard 5837 2012.

APPENDIX 2

British Standard Cascade Chart

Table 1 **Cascade chart for tree quality assessment**

Category and definition	Criteria (including subcategories where appropriate)			Identification on plan
Trees unsuitable for retention (see Note)				
Category U Those in such a condition that they cannot realistically be retained as living trees in the context of the current land use for longer than 10 years	• Trees that have a serious, irremediable, structural defect, such that their early loss is expected due to collapse, including those that will become unviable after removal of other category U trees (e.g. where, for whatever reason, the loss of companion shelter cannot be mitigated by pruning) • Trees that are dead or are showing signs of significant, immediate, and irreversible overall decline • Trees infected with pathogens of significance to the health and/or safety of other trees nearby, or very low quality trees suppressing adjacent trees of better quality *NOTE Category U trees can have existing or potential conservation value which it might be desirable to preserve; see **4.5.7**.*			See Table 2
	1 Mainly arboricultural qualities	**2 Mainly landscape qualities**	**3 Mainly cultural values, including conservation**	
Trees to be considered for retention				
Category A **Trees of high quality** with an estimated remaining life expectancy of at least 40 years	Trees that are particularly good examples of their species, especially if rare or unusual; or those that are essential components of groups or formal or semi-formal arboricultural features (e.g. the dominant and/or principal trees within an avenue)	Trees, groups or woodlands of particular visual importance as arboricultural and/or landscape features	Trees, groups or woodlands of significant conservation, historical, commemorative or other value (e.g. veteran trees or wood-pasture)	See Table 2
Category B **Trees of moderate quality** with an estimated remaining life expectancy of at least 20 years	Trees that might be included in category A, but are downgraded because of impaired condition (e.g. presence of significant though remediable defects, including unsympathetic past management and storm damage), such that they are unlikely to be suitable for retention for beyond 40 years; or trees lacking the special quality necessary to merit the category A designation	Trees present in numbers, usually growing as groups or woodlands, such that they attract a higher collective rating than they might as individuals; or trees occurring as collectives but situated so as to make little visual contribution to the wider locality	Trees with material conservation or other cultural value	See Table 2
Category C **Trees of low quality** with an estimated remaining life expectancy of at least 10 years, or young trees with a stem diameter below 150 mm	Unremarkable trees of very limited merit or such impaired condition that they do not qualify in higher categories	Trees present in groups or woodlands, but without this conferring on them significantly greater collective landscape value; and/or trees offering low or only temporary/transient landscape benefits	Trees with no material conservation or other cultural value	See Table 2

APPENDIX 3

Protective Fencing Specification

Diagram 1:

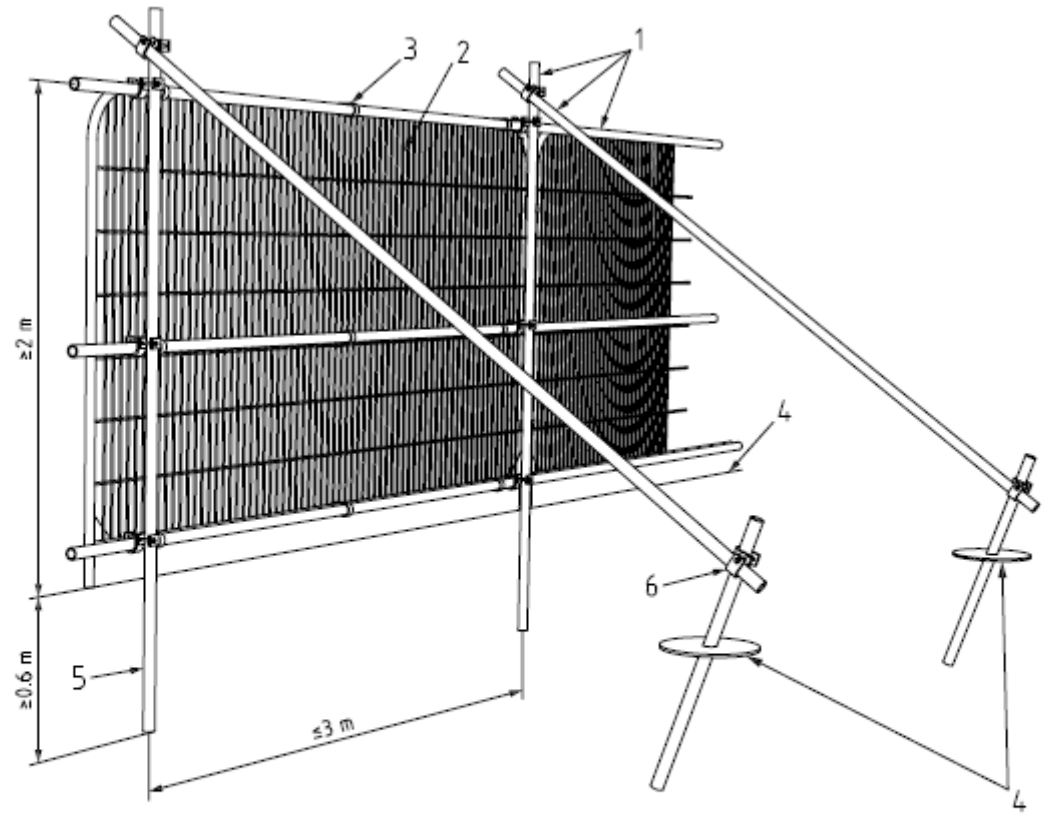

Key

1 Standard scaffold poles

2 Heavy gauge 2 m tall galvanized tube and welded mesh infill panels

3 Panels secured to uprights and cross-members with wire ties

4 Ground level

5 Uprights driven into the ground until secure (minimum depth 0.6 m)

6 Standard scaffold clamps

APPENDIX 3

Protective Fencing Specification

Diagram 2:

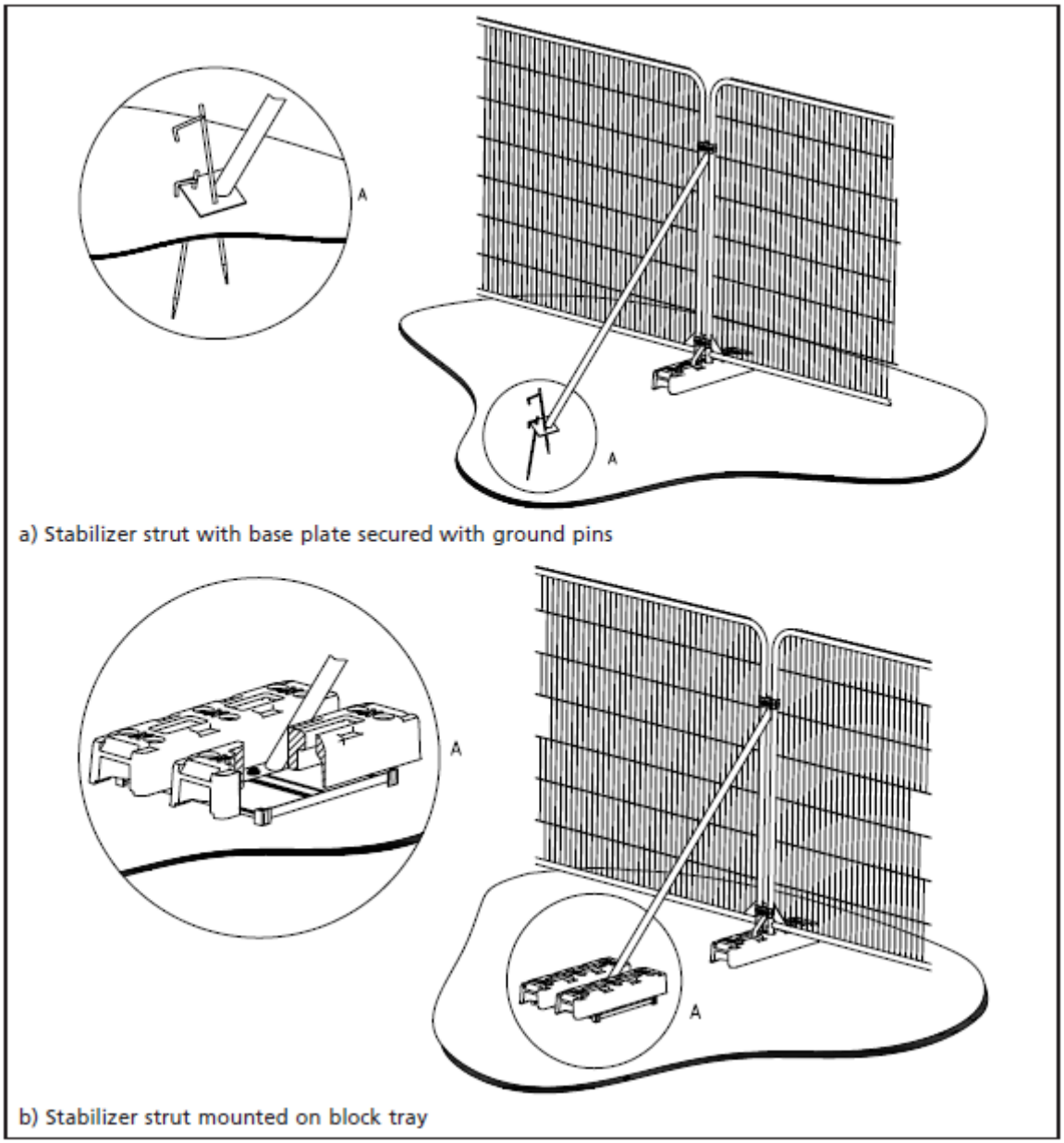

APPENDIX 4
Fence Signage

APPENDIX 4
Fence Signage

TREE PROTECTION AREA

KEEP OUT !

(TOWN & COUNTRY PLANNING ACT 1990)
TREES ENCLOSED BY THIS FENCE ARE PROTECTED BY PLANNING CONDITIONS AND/OR ARE THE SUBJECTS OF A TREE PRESERVATION ORDER. CONTRAVENTION OF A TREE PRESERVATION ORDER MAY LEAD TO CRIMINAL PROSECUTION. ANY INCURSION INTO THE PROTECTED AREA MUST BE WITH THE WRITTEN PERMISSION OF THE LOCAL PLANNING AUTHORITY .

- A suitably qualified engineer should specify the appropriate depth of geocell depending on the bearing capacity and strength of the soil, either the project engineer or an engineer from the geocell provider.

- It is important that the engineer has soil information prior to the surface being installed, the Saturated California Bearing Ratio (CBR) value of the soil will be required.

- Construction should ideally be undertaken in dry weather between May and October when the ground is driest and least prone to compaction.

- It is possible to remove the surface layer of 50mm under the supervision of the project arboriculturalist to ensure that there is no root damage.

- Ground vegetation could be killed using a translocated herbicide such as glyphosate (Care in the selection of a herbicide that will not affect retained trees is advocated.) To prevent severe oxygen depletion in the soil during the decomposition, all dead organic material should be removed.

- Geocell mats need to be laid on level surfaces, the recommended approach is to install the edge restraint followed by the base geotextile and the infill to raise the level to the highest point, sharp sand can be used but deep layers should be avoided. Angular stone aggregate of the same specification as the infill material may be used instead.

- A needle punched non-woven Geotextile underlay will be laid onto the soil over the hatched areas. If several sheets are required they should overlap by at least 300mm.

- Lay the geogrid or equivalent onto the soil over the whole of the hatched areas, staked into place as per manufacturer's instructions.

- Construct a suitable edging such as peg-and-board, wooden sleepers, standard kerbs on top of concrete filled geocells, small concrete edging kerbs or one of the commercially available metal or plastic edging strips.

- The geogrid should be filled with crushed 20/40 mm washed no-fines aggregate. This should be tipped at one end of the geogrid and spread by hand.

- An excess of aggregate protects the geocells, it is advised that the geocells are overfilled by a minimum of 25mm.

- The granular sub-base material should have a no 'fines' content which means that even when it is compacted it should be freely draining.

APPENDIX 5

Arboricultural Association Guidance Note 12

- Compact the sub-base to ensure binding with the geogrid and to minimise rutting when in final use. This can be achieved by several passes of a tracked excavator.

- The depth of geogrid required is dependent on the weight of traffic using it. the product manufacturer/project engineer should be consulted on a suitable depth of geogrid appropriate for this site.

- Over time permeable surfaces have the potential to become clogged impairing their function. As a general rule permeable surfaces should be cleaned once a year to remove silt and dirt particles.

STABILISATION GRID WEARING COURSE FILLED WITH SOIL OR GRAVEL

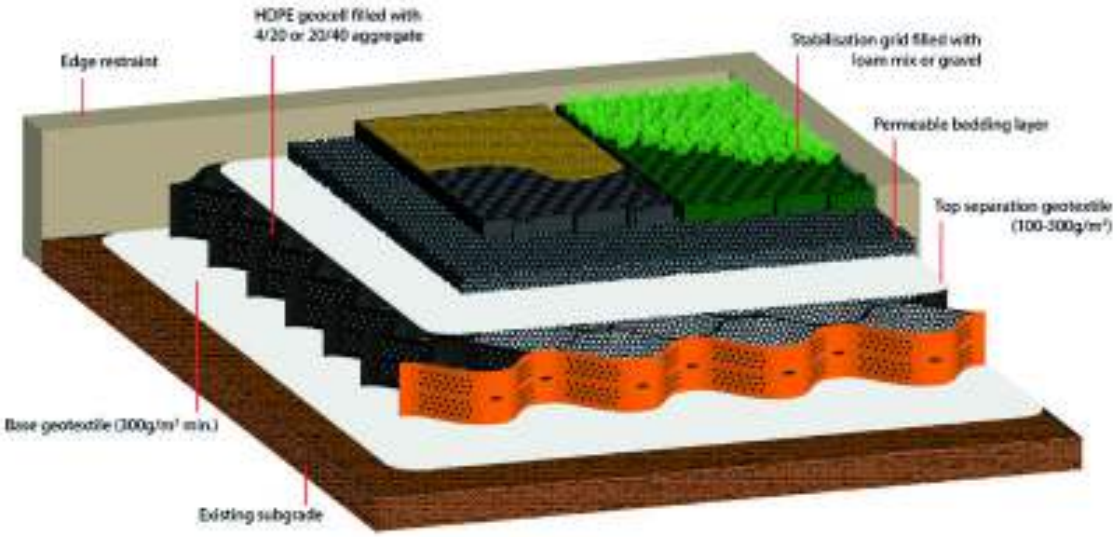

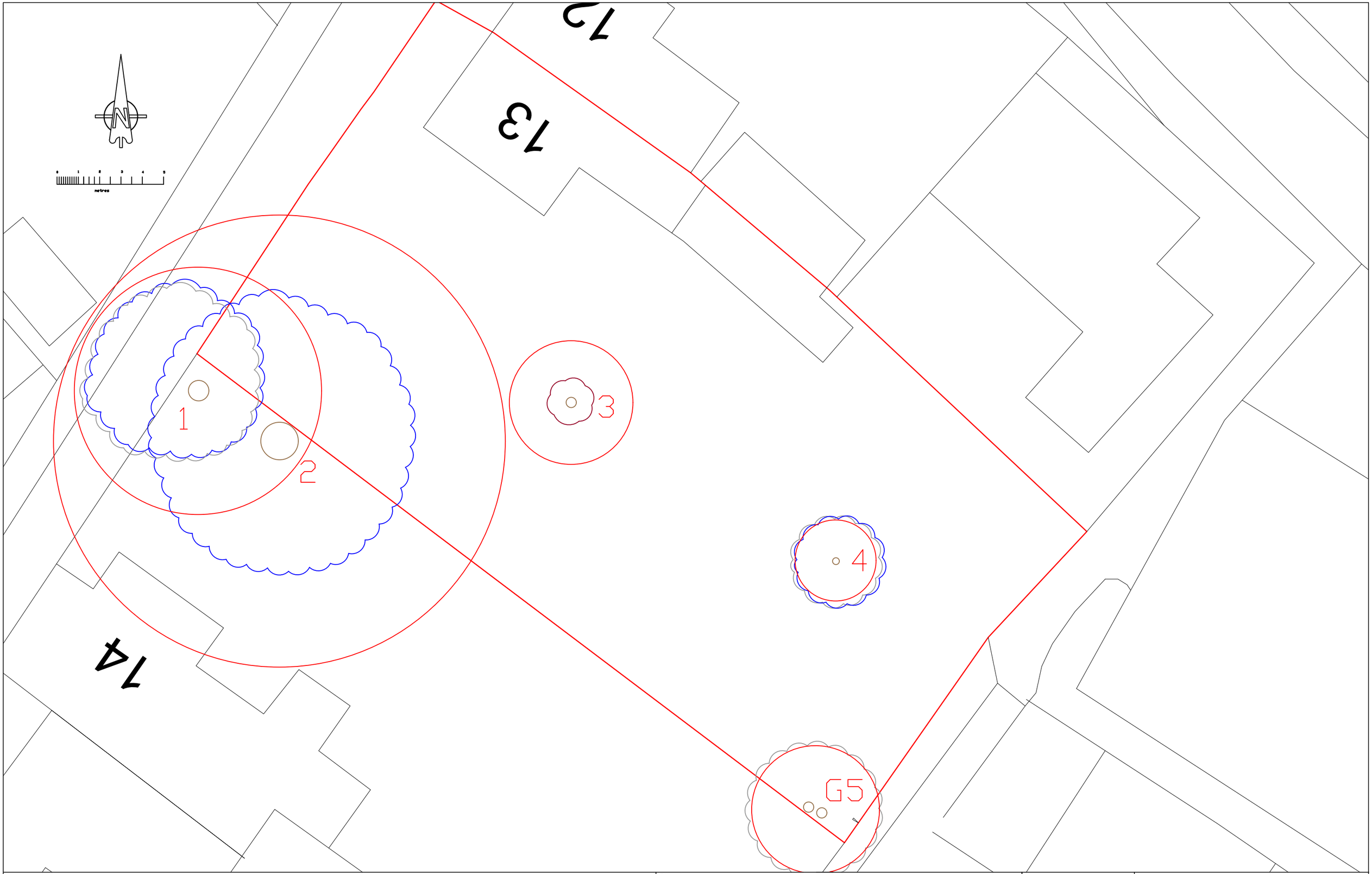

Tree Location and Number

3

BS 5837 Category Grading

A

A/B

B

B/C

C

U

Root Protection Area

NOTE> All dimensions to be checked on site.

Client Mr Huntington	Drawn by Mark Sharples	Drawing Title Tree Constraints Plan	
Job Title New Dwelling	Date 16/04/26	Drg No. 13B/TCP	

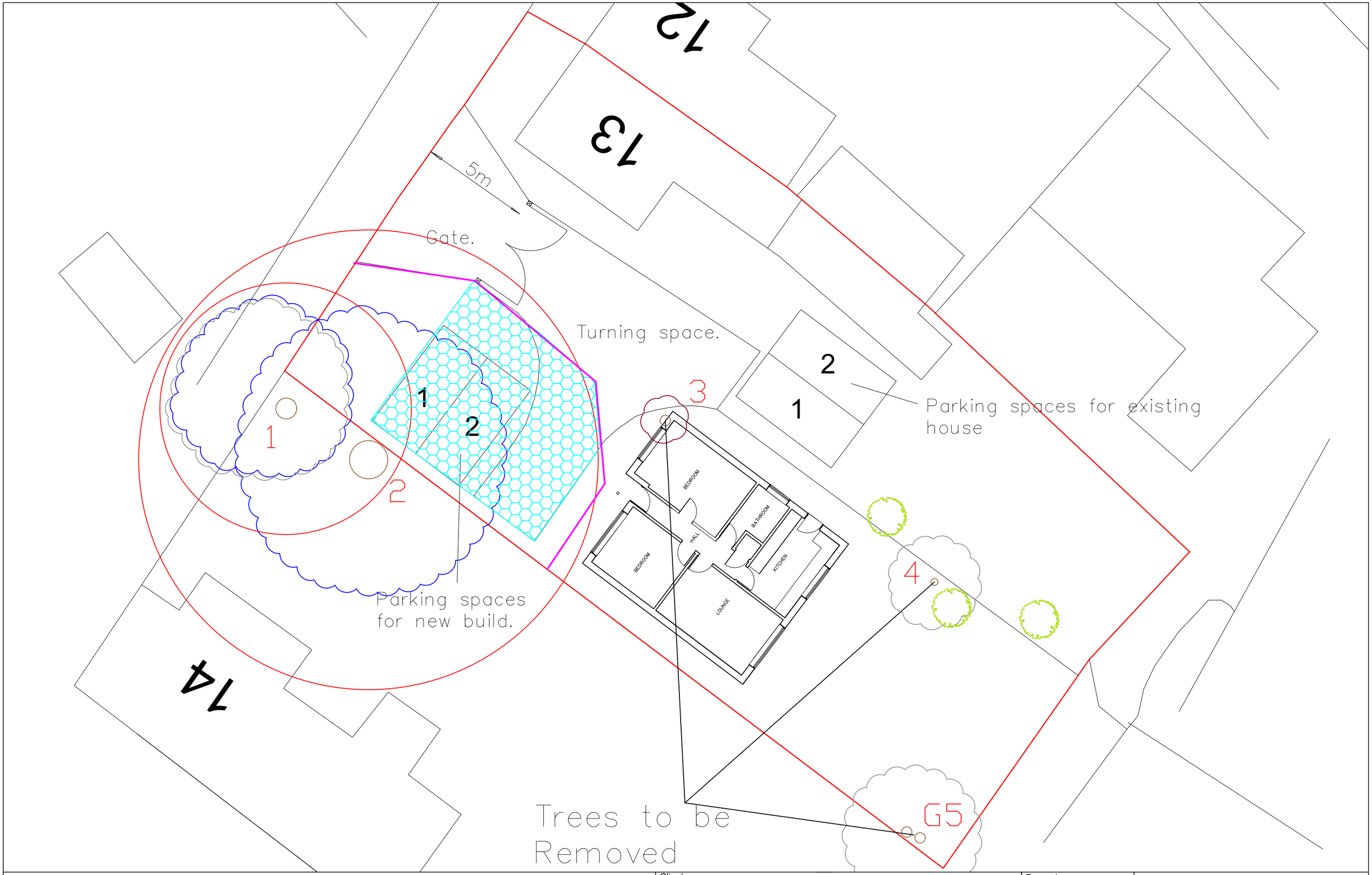

Tree location and number	Root protection area	Tree protective fence	No-dig porous driveway	Indicative new planting
○ 3				

Client Mr Huntington	Drawn by Mark Sharples	Drawing Title Tree Protection Plan
Job Title New Dwelling	Date 05 / 26	Drg No. 13B/TPP Rev -