1:5 @ A1 and 1:10 @ A3

0m 0.1 0.2 0.3 0.4 0.5

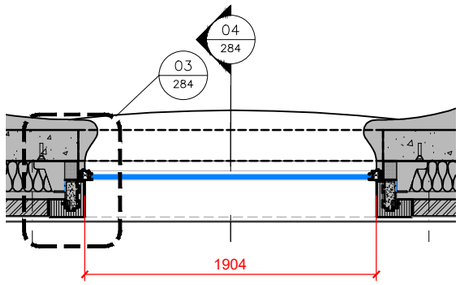

01 284 Proposed Window GL. 05 Plan

SCALE 1:20 @ A1

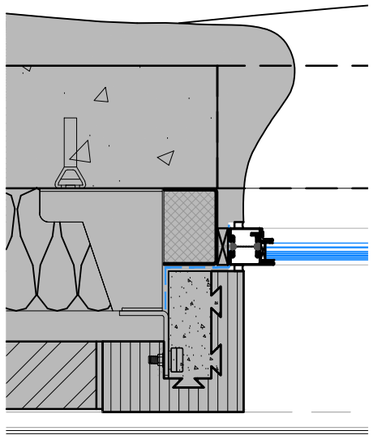

03 284 Window Jamb Detail

SCALE 1:5 @ A1

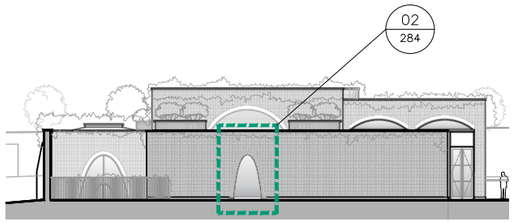

WEST ELEVATION 1:200

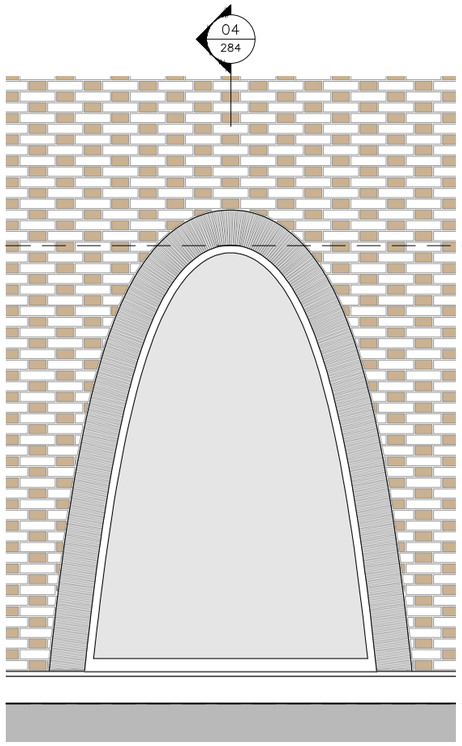

02 284 Proposed Window GL.05 Elevation

SCALE 1:20 @ A1

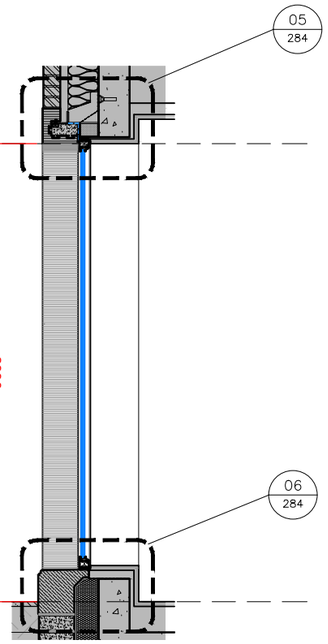

04 284 Proposed Window GL.05 Section

SCALE 1:20 @ A1

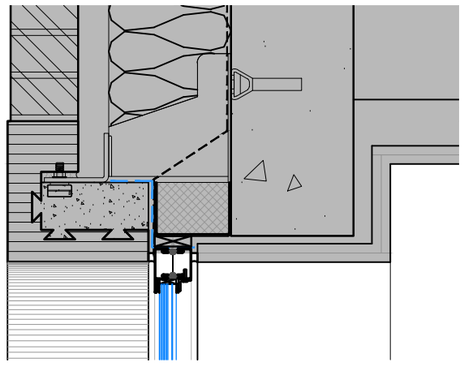

05 284 Window Head Detail

SCALE 1:5 @ A1

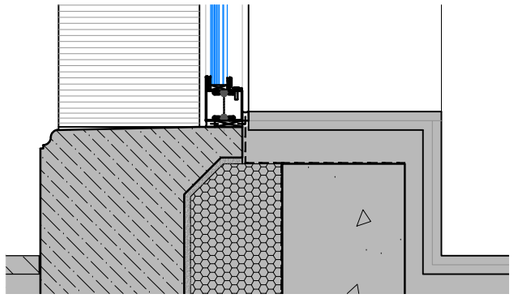

06 284 Window Threshold Detail

SCALE 1:5 @ A1

No. Notes

1. Dimensions to be verified on site. Only figured dimensions to be used and any discrepancies in dimensions are to be reported to the architect. No dimensions are to be scaled from printed drawings. Any areas indicated on this drawing are for guidance only. No responsibility is taken for their accuracy.

2. There is a risk of injury or death in construction if the works are not properly planned and supervised. The contractor must not undertake any element of the work without first having carried out the necessary risk assessments and prepared detailed method statements.

Pool House Material Specification:

Stonework: Coping Stones, Plinth Blocks, Architrave, Spandrel Panels and Cills.

Peak Moor fine / medium grained sandstone quarried on Stanton Moor, near Matlock in Derbyshire. Spandrel Panels and Plinth Blocks articulated with traditional cyma recta profile as detailed.

Face Brickwork

HG Matthews Bricks (230 x 110 x 66mm). Equal random mix of multi and light multi reds. Headers: Random mix multi (50%) / wood fired headers (50%). Bond: Flemish Joints: 8mm bed and perpend joints

Curved Arches

Dreadnought Tiles - 265 x 165mm Creasing tiles: Staffordshire Red, set to project 5mm forward from outside face of adjacent brickwork.

Rubbed Brick Arches

Gauged brick flat arch using red rubber bricks made by Bulmer Brick and Tiles, to match other flat arches in the Walle Garden

Mortar

To match mortar used on Garden Wall repairs:

The Lime Centre 'Heritage Mortar NHL2', lime mortar made with local sands to produce a pale-yellow or off-white coloured mortars using Morestead 3mm and St Astier natural hydraulic lime. USC additive. Use Heritage Mortar NHL5 below ground and to all sky facing surfaces

Timber Doors

Hardwood panelled doors finished with Sage Green paint to match other timber doors and windows in the Walled Garden.

French Doors / Pivot Doors

Steel thermally broken double glazed French Door and Pivot door systems with handcrafted patinated antique bronze metal finish.

Windows

Steel thermally broken double glazed window systems with handcrafted patinated antique bronze metal finish.

Metal Louvres

Steel Louvre systems with handcrafted patinated antique bronze metal finish.

Rooflights

Flat roof lights, with circular, or 'organic' curved shape in plan, concealed behind planted roof and stone parapet. Metal frame to protect edge of glazing units. PPC RAL 7016 anthracite grey.

Green Roof Finish (Pitched and Flat)

British grown wildflower blanket seeded with 36 native species and 4 grass species. Anticpated height of plants between 300mm and 600mm.

Atrium Roof Finish:

Bitumen capping sheet with glass / polyester reinforcement, over warm roof insulation.

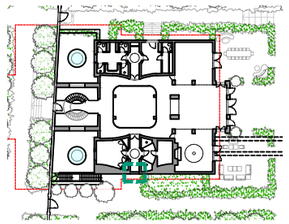

GROUND FLOOR
KEY PLAN 1:500

no.	revision.	date.
A	Specification Update	23/09/26
*	Initial Release	15/09/26

BLDA ARCHITECTS

RIBA Chartered Practice

211 Design Centre East
Chelsea Harbour
London, SW10 0XF

mail@blda.co.uk
www.blda.co.uk
t +44 (0) 20 7838 5555
f +44 (0) 20 7838 5556

Job: TH Pool House

Title: Proposed Window GL.05

Type: Pool House Details (Condition Discharge)

Status: FOR PLANNING

drawn by	checked by	approved by
----	MB	DY
scale 1:5 @ A1	size A1	date 16/09/26
job number 3121	drawing number 284	revision A