Proposed North & East Elevations:

ALVEDISTON MANOR, ALVEDISTON

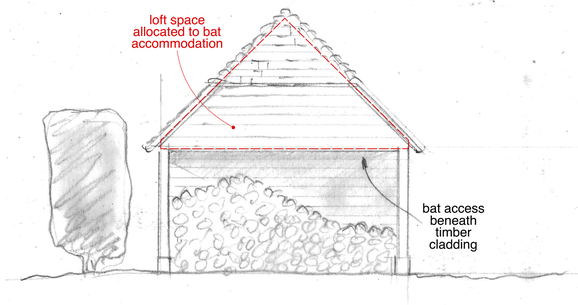

West Facing Elevation (Scale 1:50 @ A1):

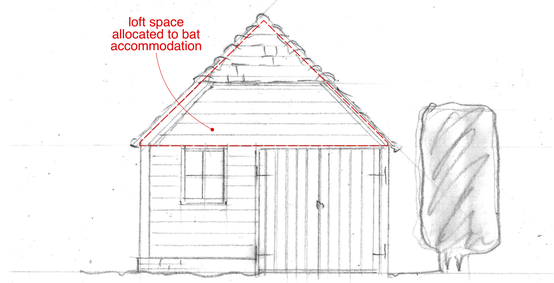

East Facing Elevation (Scale 1:50 @ A1):

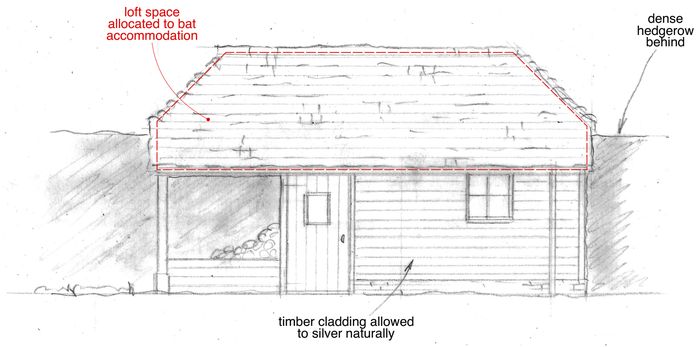

South Facing Elevation (Scale 1:50 @ A1):

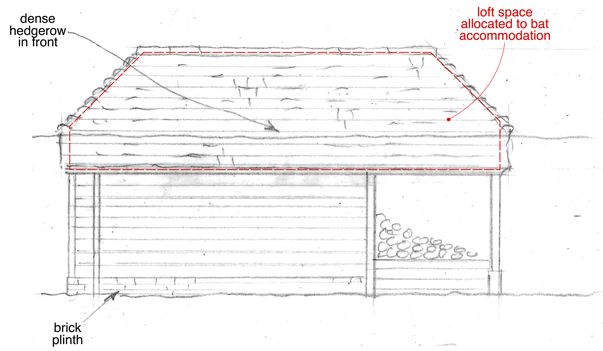

North Facing Elevation (Scale 1:50 @ A1):

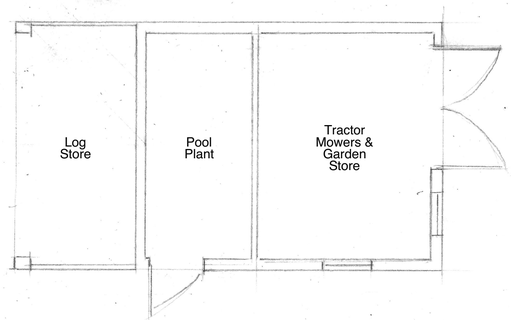

Shed Floor Plan (Scale 1:50 @ A1):

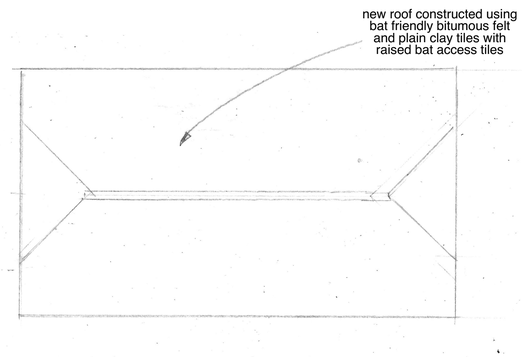

Shed Roof Plan (Scale 1:50 @ A1):

THESE DRAWINGS ARE FOR PLANNING PURPOSES ONLY
ALL MEASUREMENTS MUST BE CHECKED ON SITE
THESE DRAWINGS ARE NOT FOR CONSTRUCTION

0 5 10 M

Scale 1:50 @ A1

TFH REEVE

ARCHITECTURAL DESIGN · CONSULTANCY
SURVEYS · RESTORATION
CONSERVATION EXPERTISE

Tel: 01747 828677

DONHEAD MILL
DONHEAD ST ANDREW
SHAFTESBURY
DORSET SP7 9EP

FAX: 01747 829205
e-mail: tfhreeve@gmail.com

CLIENT:	Mr & Mrs R Heath	SCALE:	as shown
JOB:	Alvediston Manor, The Street, Alvediston, Salisbury, Wiltshire, SP5 5JZ	DATE:	06/2025
		DRAWN:	
		CHECKED:	TFR
DWG:	Proposed North & East Elevations (Sheet 1)	DWG Nº:	1502/12A