NOTES

1. No dimensions are to be scaled from this drawing.
2. Contractors must verify all figured dimensions on site before commencing any work or making any shop drawings.
3. This drawing is the sole copyright of Savills and no part may be reproduced without the written consent of the above.
4. Site Location Plans are prepared from the Ordnance Survey Map with the sanction of the Controller of H.M. Stationery Office. Crown Copyright Reserved.

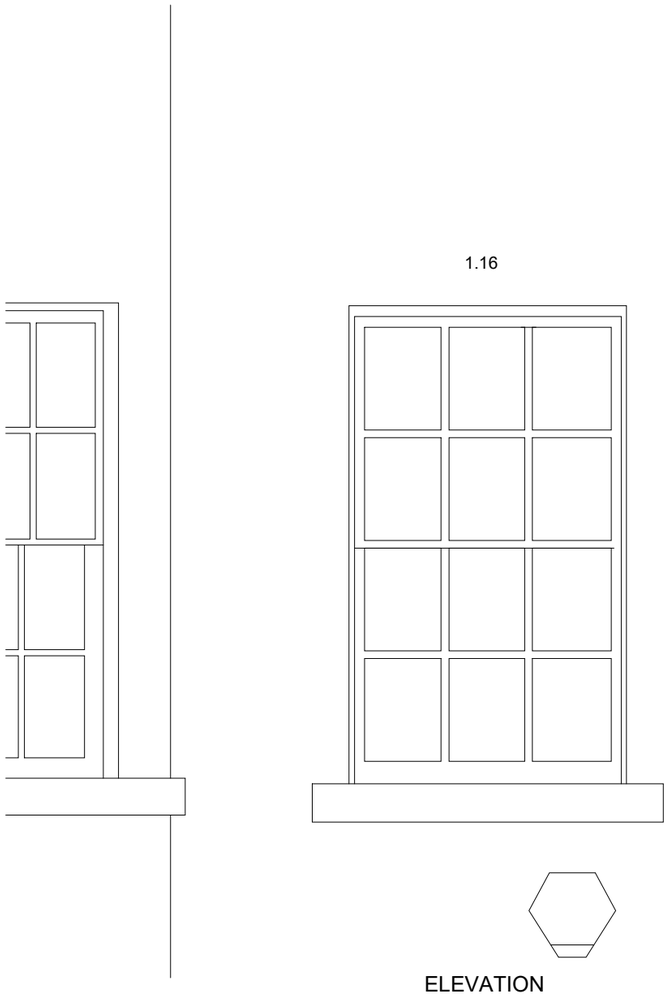

ELEVATION

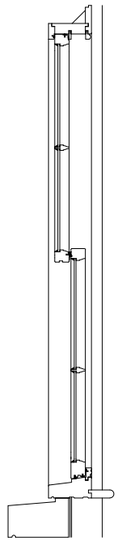

SECTION

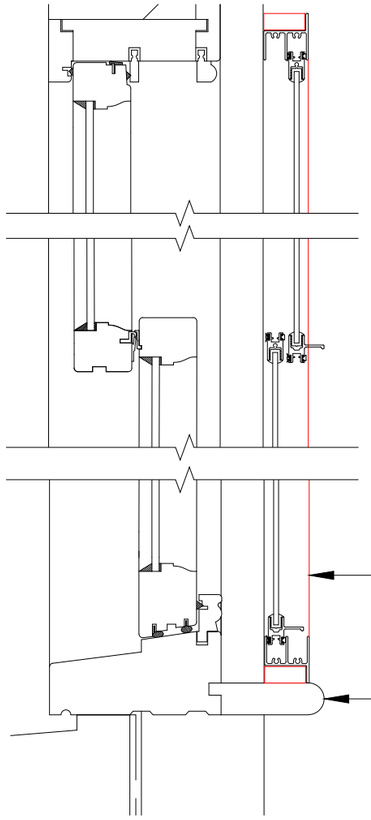

PROPOSED SECTION scale 1:5 @ A3

WINDOW LOCATION scale 1:200 @ A3

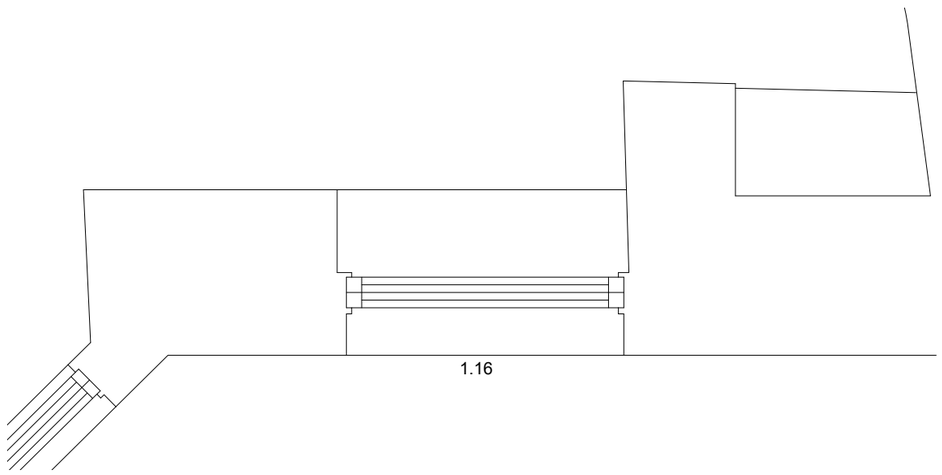

PLAN

BOTTOM SASH BOTTOM RAIL REQUIRES REPAIR

EXTERNAL STAFF BEADS ARE SHOWING DECAY.

ALL SASH BOX COVERS ARE SHOWING DECAY

UNLESS REPLACEMENT IS SPECIFIED ALL OTHER REPAIRS WILL BE UNDERTAKEN BY STRIPPING AND SANDING TIMBER BACK TO SOUND TIMBER AND REPAIRCARE TWO PART EPOXY RESIN APPLIED TO BUILT UP TO MATCH EXISTING PROFILE

LIKE FOR LIKE TIMBER SPECIES WILL BE EMPLOYED FOR ANY SPLICING REPAIRS IDENTIFIED

0.0M 0.5M 1.0M

Rev	Description	By	Date

Drawing Status
PLANNING LBC

savills

ARCHITECTURE & BUILDING CONSULTANCY
Savills (UK) Limited
Wytham Court, 11 West Way,
Botley, Oxford OX2 0QL

Telephone: + 44 (0)1865 269000
Fax: + 44 (0)1865 269001
www.savills.co.uk

Client
The Ninth Duke of Newcastle
1987 Settlement

Project
44-45 Market Place
Chippenham
-

Drawing Title
Windows 1.16
Repairs and secondary glazing
-

Scale	Date	Drawn	Checked
1:20 @ A3	July 2026	RE	SN

Drawing Number	Rev.	Project Number
26-32-13	-	771254