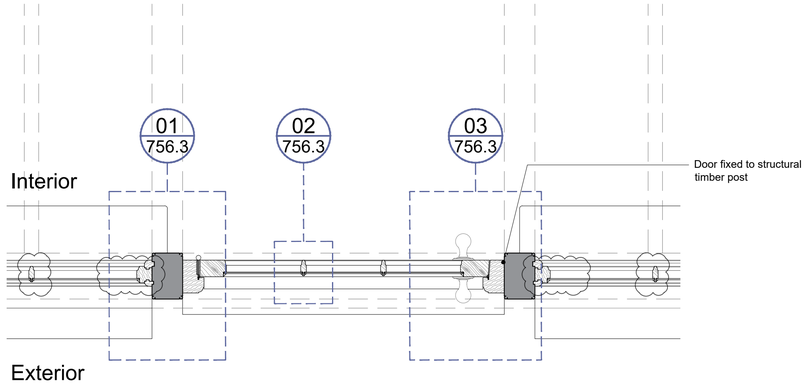

01 / 756.1 Door Type B2 - Typical Single Glazed Glasshouse Front Door Plan

SCALE 1:10 @ A1

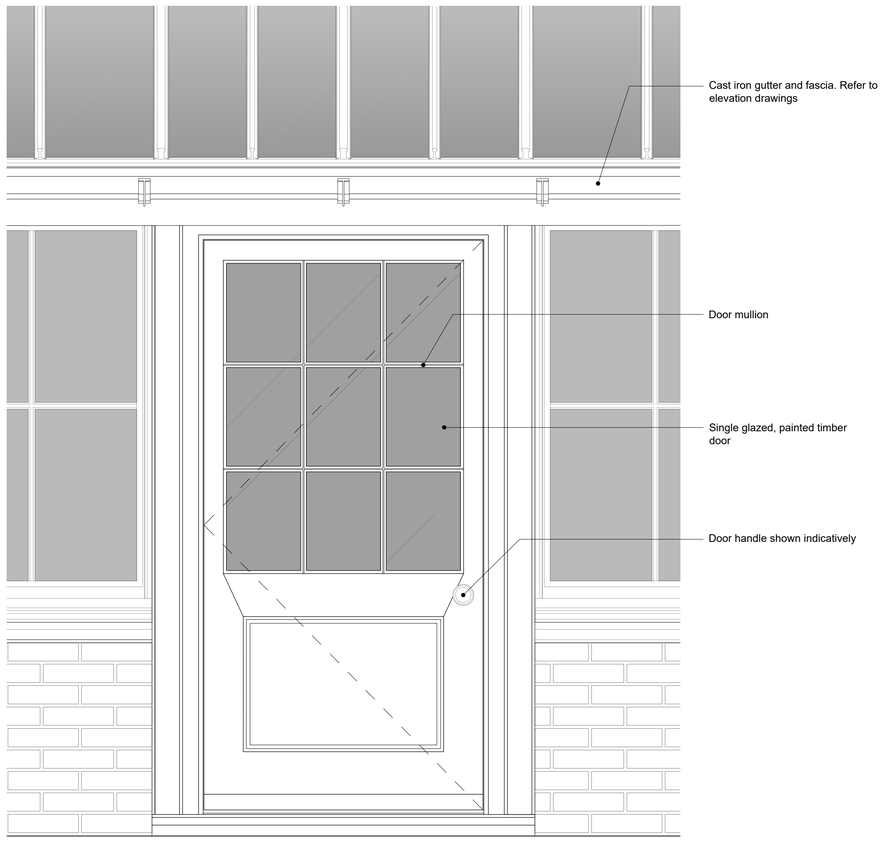

02 / 756.1 Door Type B2 - Typical Single Glazed Glasshouse Front Door External Elevation

SCALE 1:10 @ A1

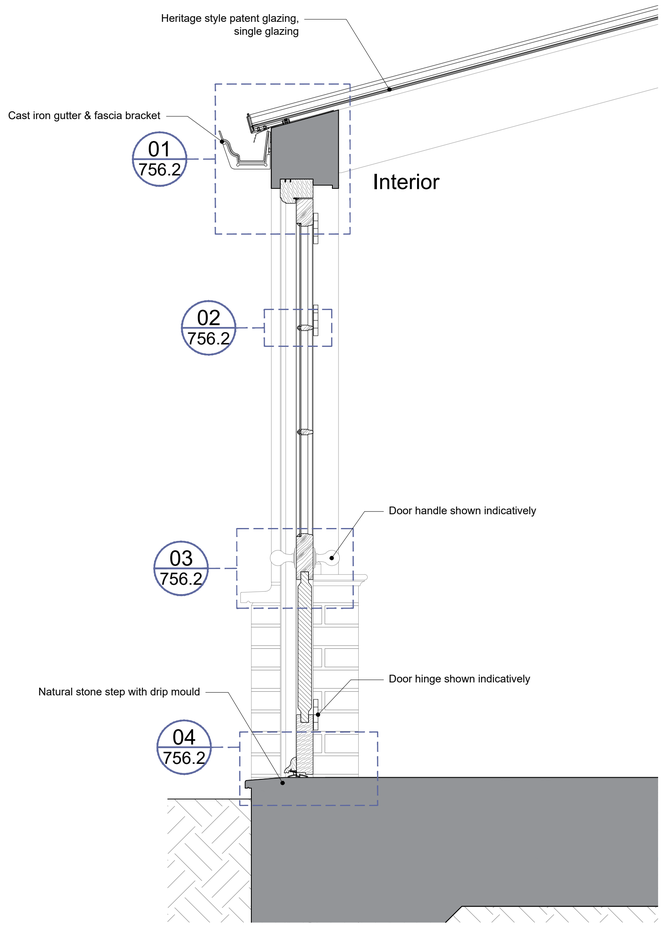

03 / 756.1 Door Type B2 - Typical Glasshouse Front Door Section

SCALE 1:10 @ A1

Scale 1:10@A1

0 0.1 0.2 0.4 0.6 0.8 1m

No.	Notes
1.	Dimensions to be verified on site. Only figured dimensions to be used and any discrepancies in dimensions are to be reported to the architect. No dimensions are to be scaled from printed drawings. Any areas indicated on this drawing are for guidance only. No responsibility is taken for their accuracy.
2.	There is a risk of injury or death in construction if the works are not properly planned and supervised. The contractor must not undertake any element of the work without first having carried out the necessary risk assessments and prepared detailed method statements.

FOR PLANNING

no.	revision.	date.
P3	Title block changed to typical details, through glazing amendment on glazing plan	04/08/26
P2	Mullions amended, changed to raised & fielded panels	07/04/26
P1	Initial Release	dd/mm/yy

BLDA ARCHITECTS

RIBA Chartered Practice

211 Design Centre East
Chelsea Harbour
London, SW10 0XF

mail@blda.co.uk
www.blda.co.uk
t +44 (0) 20 7838 5555
f +44 (0) 20 7838 5556

Job: TH - Walled Garden Buildings

Title: Typical Door Details - DTB2
Door Type - B2
Sheet 1 of 3

Type: Typical Door Details

Status: FOR PLANNING

drawn by	JM	checked by	DY	approved by	DY
scale	1:10 @ A1	size	A1	date	04/08/26
job number		drawing number		revision	
3124		756.1		P3	