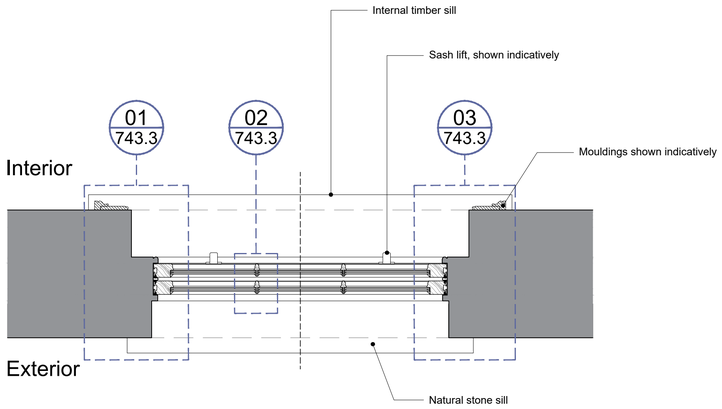

01 743.1 Window Type A4 - Typical Timber Sash (6 over 6) Window Plan

SCALE 1:10 @ A1

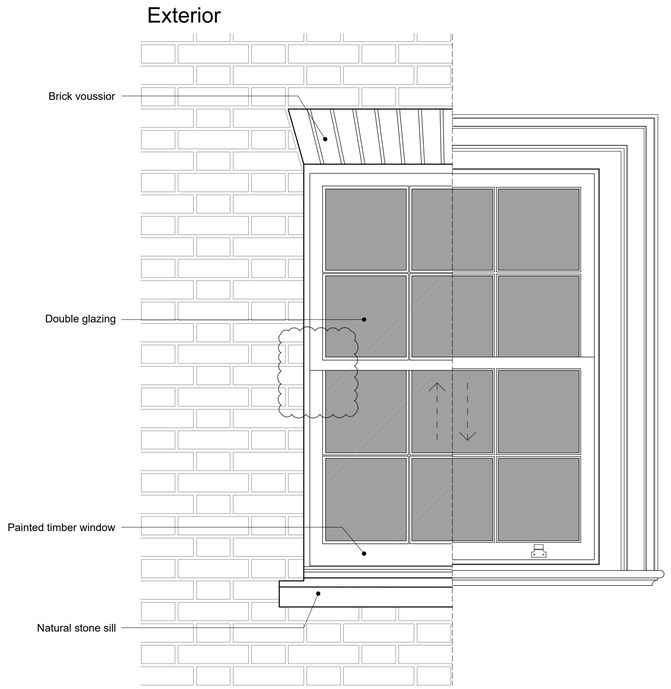

02 743.1 Window Type A4 - Typical Timber Sash (6 over 6) Window Elevations

SCALE 1:10 @ A1

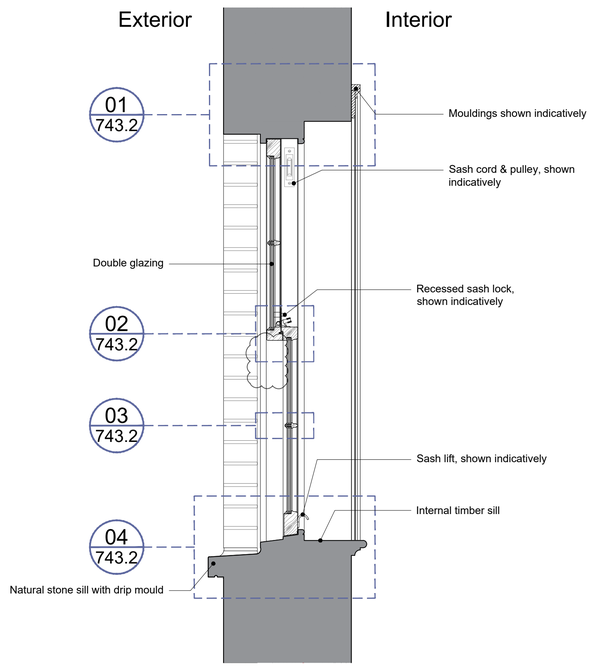

03 743.1 Window Type A4 - Typical Timber Sash (6 over 6) Window Section

SCALE 1:10 @ A1

Scale 1:10@A1

0 0.1 0.2 0.4 0.6 0.8 1m

No.	Notes
1.	Dimensions to be verified on site. Only figured dimensions to be used and any discrepancies in dimensions are to be reported to the architect. No dimensions are to be scaled from printed drawings. Any areas indicated on this drawing are for guidance only. No responsibility is taken for their accuracy.
2.	There is a risk of injury or death in construction if the works are not properly planned and supervised. The contractor must not undertake any element of the work without first having carried out the necessary risk assessments and prepared detailed method statements.

FOR PLANNING

no.	revision.	date.
P3	Sash horns removed	28/07/26
P2	Glazing type and annotations amended, external sash pulls removed, sill size increased	07/04/26
P1	Initial Release	dd/mm/yy

BLDA ARCHITECTS

RIBA Chartered Practice
211 Design Centre East
Chelsea Harbour
London, SW10 0XF
mail@blda.co.uk
www.blda.co.uk
t +44 (0) 20 7838 5555
f +44 (0) 20 7838 5556

Job: TH - Walled Garden Buildings

Title: Typical Window Details WTA4 P3
Window Type - A4
Sheet 1 of 3

Type: Typical Window Details

Status: FOR PLANNING

drawn by	JM	checked by	MB	approved by	MB
scale	1:10 @ A1	size	A1	date	27/07/26
job number		drawing number		revision	
3124		743.1		P3	