Extension Neck Fitting Instructions

Maxiumum invert for IPS units is 1000 mm

1. Remove existing riser and lid assembly.
2. Position Ext Neck onto shaft using existing gasket.
3. Fit second Ext neck if required on top of first Ext neck using gasket supplied.
4. Trim existing neck to required height if necessary.
5. Reposition riser assembly on top of Ext neck using gasket supplied.

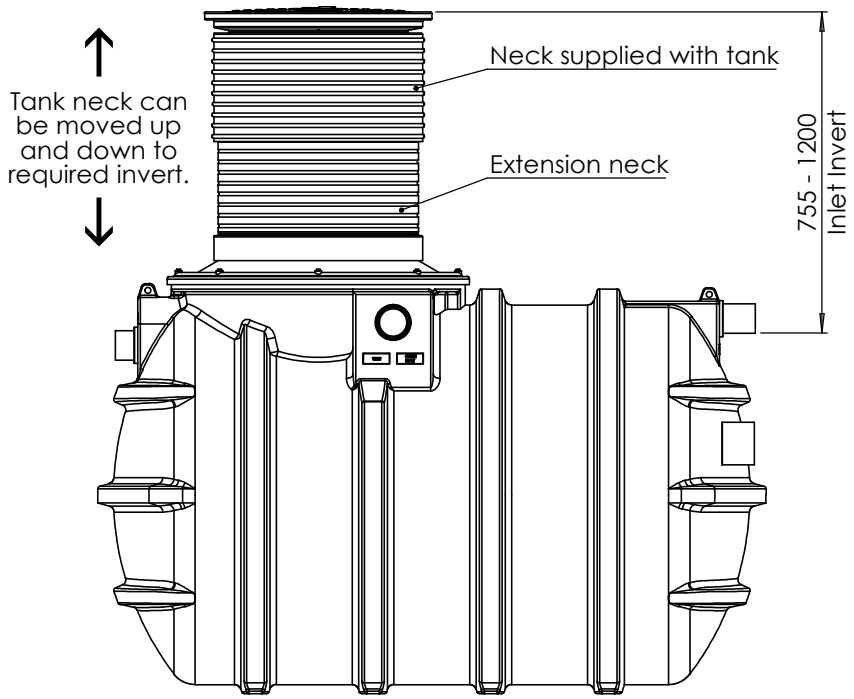

BioAir 2
For invert from 755 mm to 1200 mm
order 1 of **BPAEXT13**

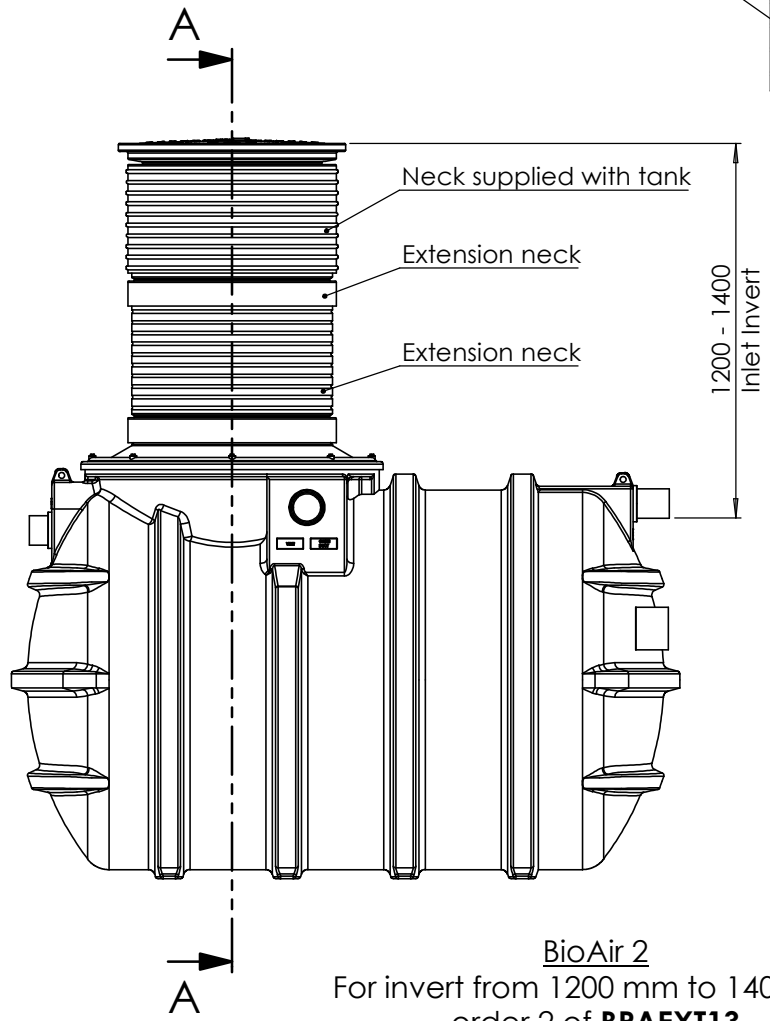

BioAir 2
For invert from 1200 mm to 1400 mm
order 2 of **BPAEXT13**

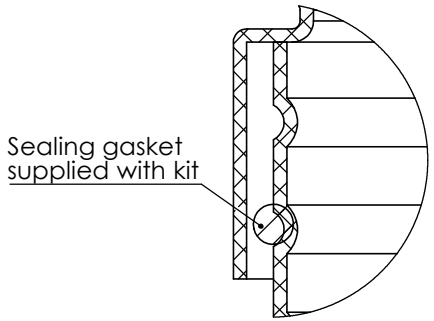

DETAIL B
SCALE 1 : 2

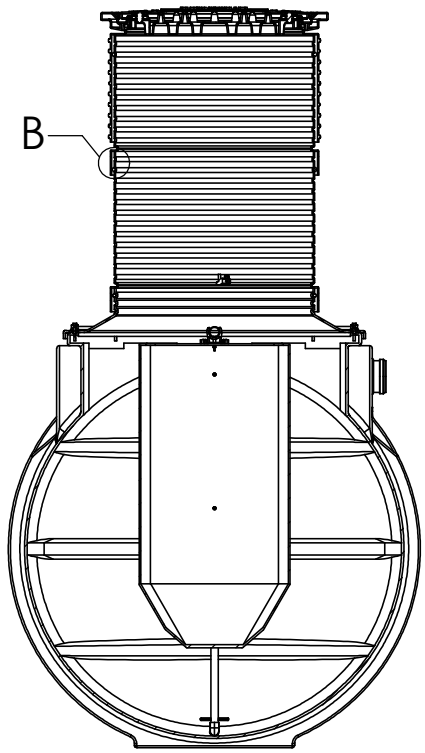

SECTION A-A
SCALE 1 : 20

Please check with Kingspan Water & Energy for the latest Issue of the drawing				
Issue	Date	Drawn By	Approved By	Description
01	23/03/2023	D.Owen	D.Owen	Initial Issue

All Dimensions In mm | Scale: Do Not Scale | Third Angle Projection

A:\Wastewater\Engineering\Engineering Projects\962A - BioAir (Activated Sludge)\962A - Models\DS1415P\DS1415P

Modelled By : D.Owen
Weight : 170 kg
Material : Various

Tolerance (unless stated) :
Thickness :
Surface Area : m²

Kingspan Water & Energy reserve the right to alter the details of this drawing without prior notice. This drawing is copyright and may not be reproduced or used without the written permission of Kingspan Water & Energy

Drawing : DS1415P

BioAir 2, 3 & 5 Extension Neck Details

Kingspan

Extension Neck Fitting Instructions

Maxiumum invert for IPS units is 1000 mm

1. Remove existing riser and lid assembly.
2. Position Ext Neck onto shaft using existing gasket.
3. Fit second Ext neck if required on top of first Ext neck using gasket supplied.
4. Trim existing neck to required height if necessary.
5. Reposition riser assembly on top of Ext neck using gasket supplied.

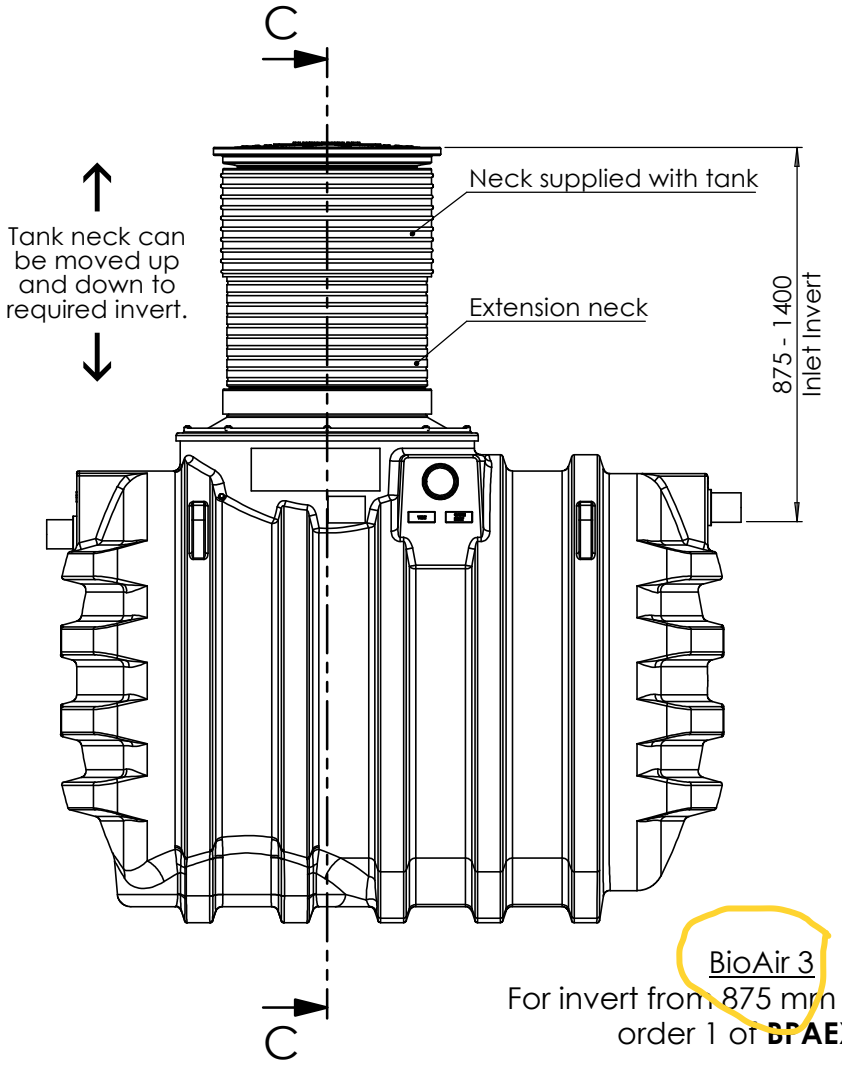

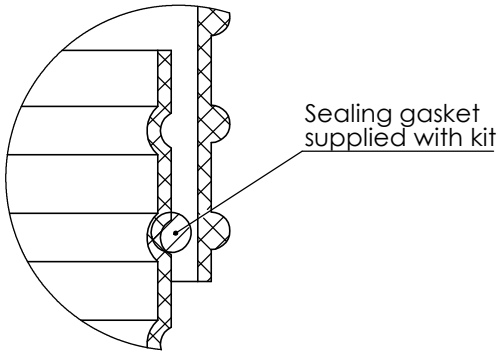

DETAIL D

SCALE 1 : 2

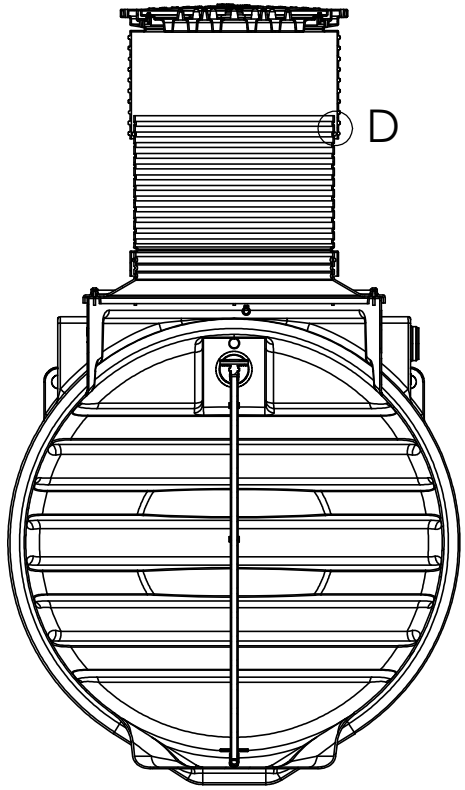

SECTION C-C

SCALE 1 : 20

BioAir 3

For invert from 875 mm to 1400 mm

order 1 of **BPAEXT13**

Modelled By : D.Owen	Tolerance (unless stated) :
Weight : 200 kg	Thickness : n/a
Material : Various	Surface Area : m²

Drawing : DS1415P

BioAir 2, 3 & 5 Extension Neck Details

All Dimensions In mm | Scale: Do Not Scale | Third Angle Projection

A:\Wastewater\Engineering\Engineering Projects\962A - BioAir (Activated Sludge)\962A - Models\DS1415P\DS1415P

Kingspan Water & Energy reserve the right to alter the details of this drawing without prior notice. This drawing is copyright and may not be reproduced or used without the written permission of Kingspan Water & Energy

Kingspan

Extension Neck Fitting Instructions

Maxiumum invert for IPS units is 1000 mm

1. Remove existing riser and lid assembly.
2. Position Ext Neck onto shaft using existing gasket.
3. Fit second Ext neck if required on top of first Ext neck using gasket supplied.
4. Trim existing neck to required height if necessary.
5. Reposition riser assembly on top of Ext neck using gasket supplied.

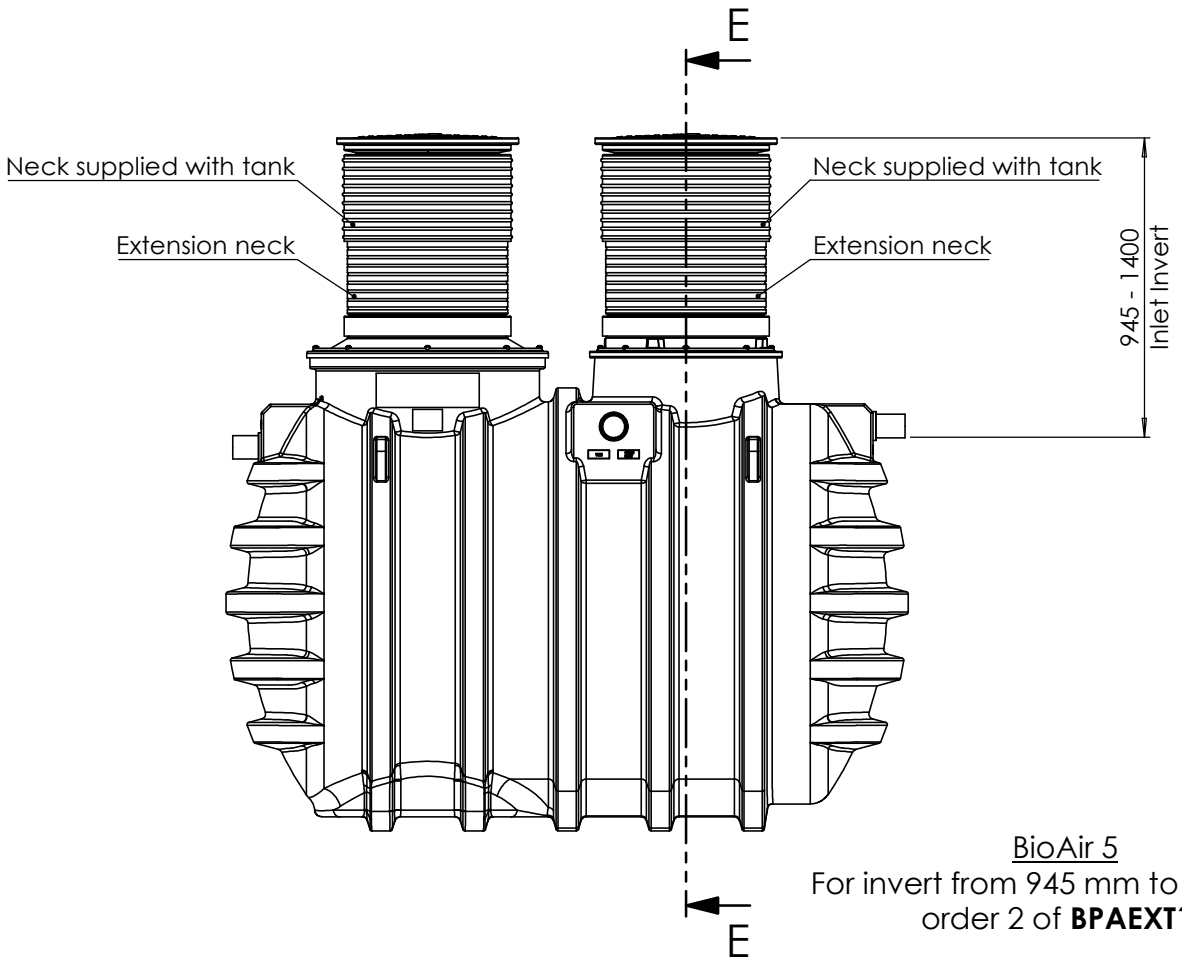

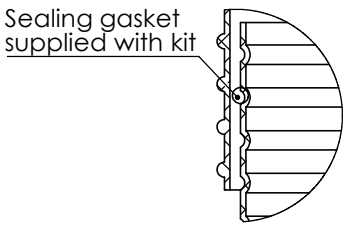

DETAIL F

SCALE 1 : 5

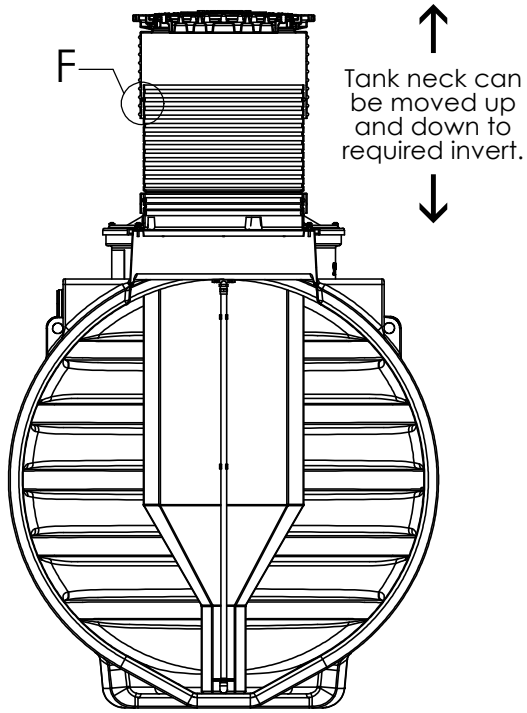

SECTION E-E

SCALE 1 : 25

BioAir 5

For invert from 945 mm to 1400 mm
order 2 of **BPAEXT13**

Modelled By : D.Owen	Tolerance (unless stated) :	**Drawing : DS1415P**	Page 3 of 3
Weight : 650 kg	Thickness : n/a	BioAir 2, 3 & 5 Extension Neck Details	
Material : Various	Surface Area : m²		

All Dimensions In mm | Scale: Do Not Scale | Third Angle Projection

A:\Wastewater\Engineering\Engineering Projects\962A - BioAir (Activated Sludge)\962A - Models\DS1415P\DS1415P

Kingspan Water & Energy reserve the
right to alter the details of this drawing without prior notice.
This drawing is copyright and may not be reproduced or used without
the written permission of Kingspan Water & Energy

Kingspan