HAGS® Product Information

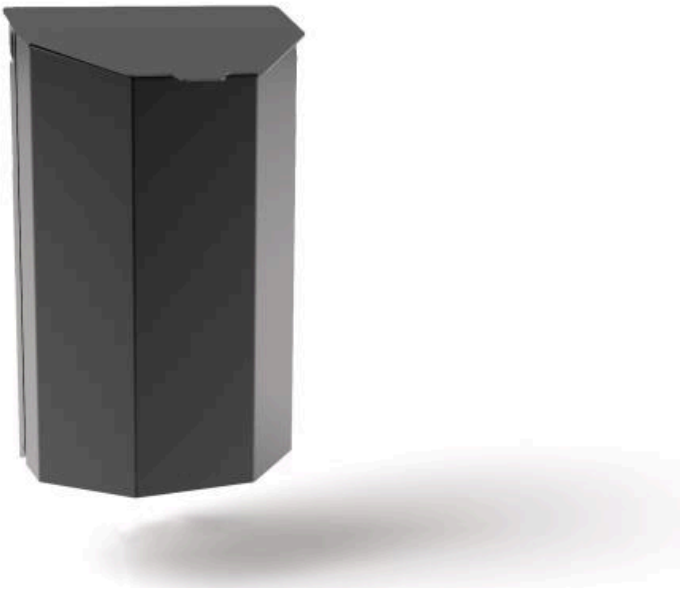

# Litter Bin Rosen

## 8049774

1

Wall and Post Fitting

0 x 0

Black

40 L

This robust 40 litre litter bin has been designed to have a discreet high end look whilst offering optimal usability. Its sloped top makes it virtually impossible to lay bottles on top and its front opening door allows for easy emptying. Rosen can also be used for the disposal of dog waste. Available in standard black or galvanised finish. Contact HAGS for custom Colour settings. Spare or replacement parts for products certified by the Nordic Swan Ecolabel will be available for 10 years after the product is discontinued. For pricing and ordering details, please contact us via the contact form.

| Age Range | Number Of Users | Assembly time | Free Height Fall EN1176 | Impact Area EN1176 | Wheelchair Accessible | Space Needed |
|---|---|---|---|---|---|---|

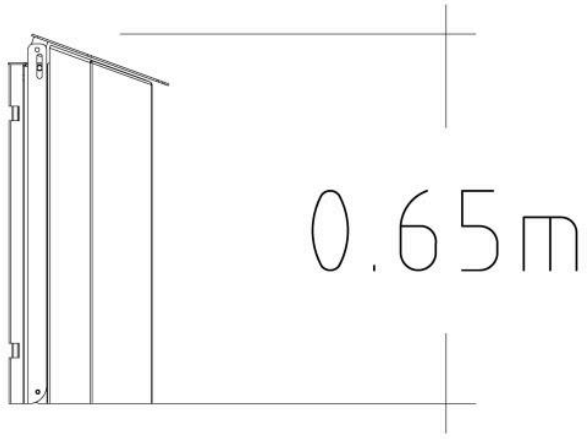


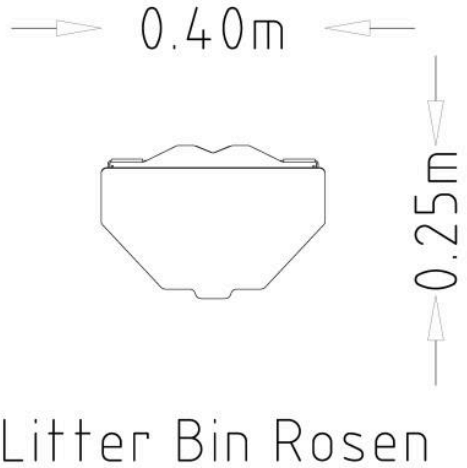


| Specifications | |
|---|---|
| **Length (mm):** | 400 mm |
| **Width (mm):** | 250 mm |
| **Height (mm):** | 650 mm |
| **Net Weight:** | 19.3 kg |
| **Assembly Time:** | 0.25 Hours |

## Anchoring

Wall and Post Fitting

# HAGS® Sustainability

## 8049774: Litter Bin Rosen

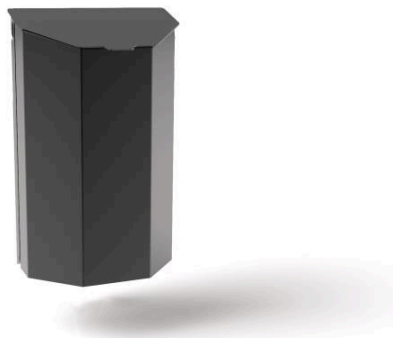

**Recycled:** Made from materials that have been processed and reused instead of discarded.

**Recyclable:** Can be collected, processed, and turned into new products instead of becoming waste.

**Renewable:** Comes from natural sources that can replenish over time such as sustainably harvested wood.

Transparency is key for HAGS. Our materials come from various suppliers, therefore the Recycled, Recyclable, and Renewable percentages are shown as the maximum possible values used in the materials. As we source more sustainable materials, these numbers will change.

| Material | kg | % | Recycled | Recyclable | Renewable |
|---|---|---|---|---|---|
| Aluminum | 0.008 | 0.05 | 0%* | 100% | 0% |
| Polyamide (PA) | 0.004 | 0.02 | 0% | 100% | 0% |
| Polyester | 0.02 | 0.12 | 0% | 0% | 0% |
| Powder coating polyester | 0.697 | 4.3 | 0% | 0% | 0% |
| Rubber | 0.002 | 0.01 | 89% | 100% | 0% |
| Stainless steel | 0.77 | 4.75 | 90% | 100% | 0% |
| Untreated Steel | 14.712 | 90.75 | 69% | 100% | 0% |
| Zink (electro-galvanised) | 0 | 0 | 0% | 100% | 0% |
| Zink (hot-galvanised) | 0 | 0 | 70% | 100% | 0% |
| | **16 kg** | **100%** | | | |

*We use REDUXA, a high-quality, certified **low-carbon aluminum**, produced using renewable energy (mainly hydro and wind power). Its carbon footprint is **max 4.0 kg $CO_2$ per 1 kg of aluminum**, which is about one-quarter of the global average (approx. 16 kg $CO_2$ per 1 kg). It is produced using clean energy and modern, energy-efficient technologies.

# HAGS® Materials

Structural Steel

High Pressure Laminate (HPL)

Nordic Pine Wood

FSC Certified Hardwood

Thermally Treated Nordic Pine Wood

Steel Core Rope

Recycled Plastic

Aluminium

Rubber,

Fasteners

For more information on our materials, please visit the **Materials** page via **About**.

For more information on our product warranties, please visit the **Warranties** page via **About**.

**Please note:** These warranties are applicable solely to HAGS products. Third-party items may come with their own separate warranty terms. For further details, feel free to **contact us.**

## Welcome to the world of HAGS

We want to help people experience life the HAGS way. We inspire all generations to open their imaginations and explore the world through play and connection. We strive to connect people to the outdoors to harmonise with nature. We contribute to helping communities get happier and healthier through exercise. We are dedicated to ensuring safe and effortless access to boats and the sea by developing user-friendly and efficient docking systems.

### But wait, there's more to our story...

...we achieve these goals through our exceptional range of play equipment, essential park and urban furniture, as well as our excellent sport and fitness equipment.

### Guide to HAGS symbols

Our products are labelled with symbols showing assembly time, recommended age, inclusive play, free fall height, space required, etc. See below for the symbols used in this brochure.

Age Range | Number Of Users | Assembly time | Free Height Fall EN1176 | Impact Area EN1176 | Wheelchair Accessible | Space Needed

For more information about all our amazing products, please visit **www.hags.com**