Section Through
Metal Casement Windows
To Proposed Kitchen Extension

Scale 1:2

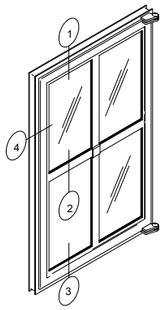

Side Hung
(Equal Leg Shown)
Diagram Not to Scale

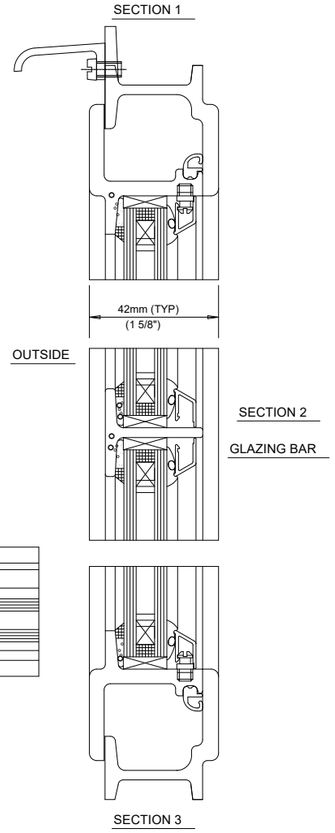

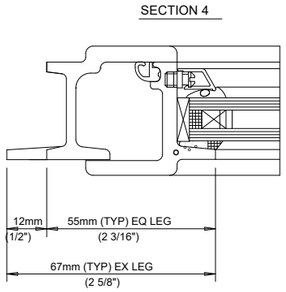

0 50 100 150 200 mm

SCALE MEASUREMENTS SHOWN IN MILLIMETRES.
ACCURACY OF SCALE CAN ONLY BE ASSURED ON
PROPERLY CALIBRATED MACHINERY

Section Through Proposed
Metal Casement Windows
To Existing House

Scale 1:1

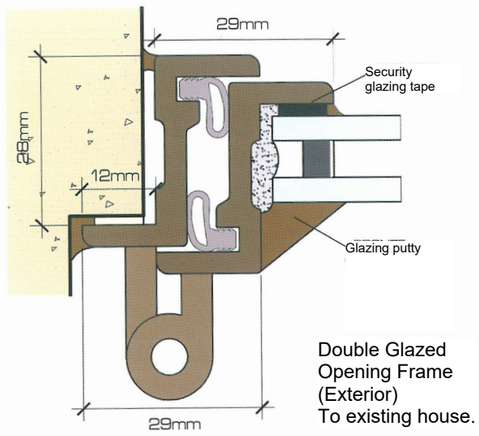

Double Glazed
Opening Frame
(Exterior)
To existing house.

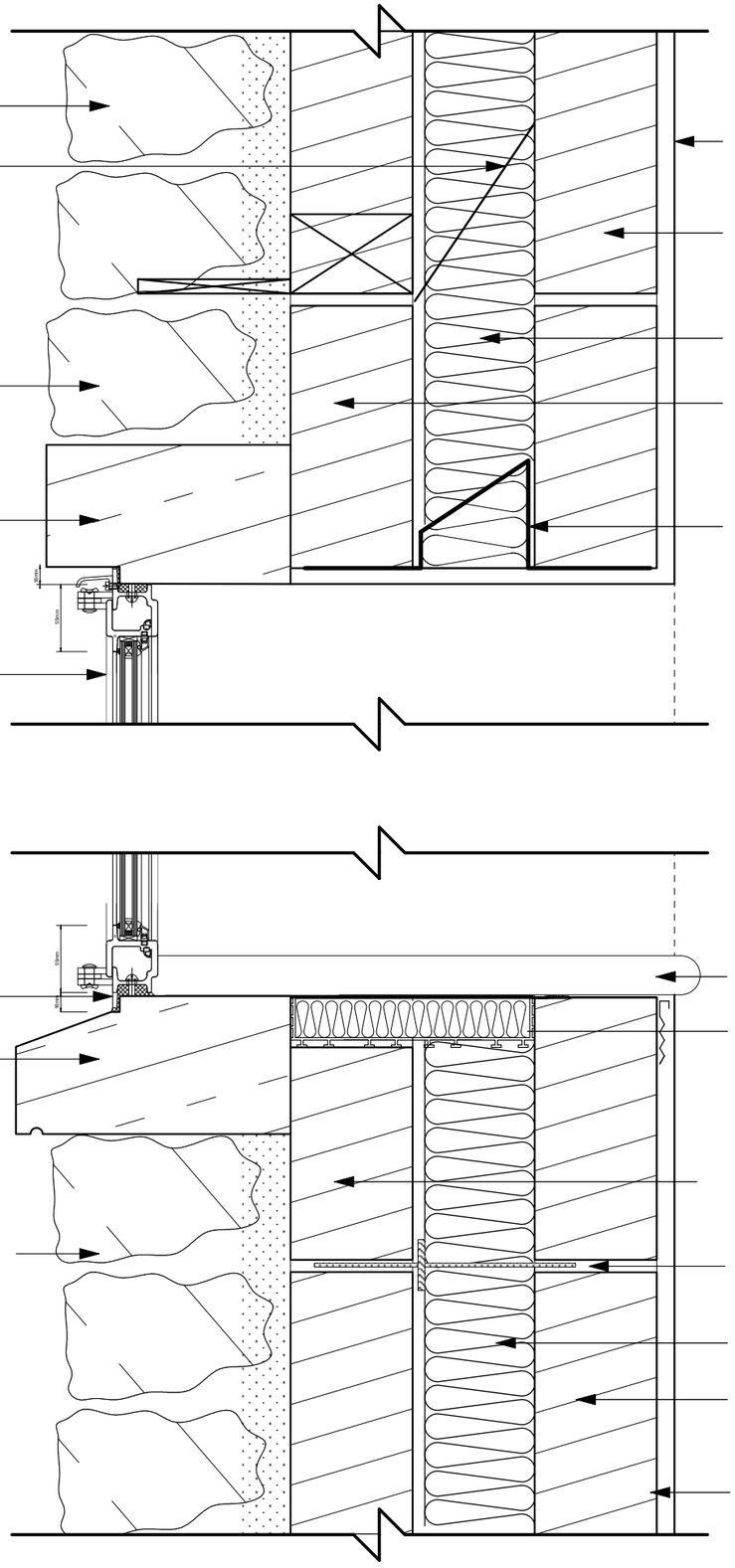

S C A L E 1:5

0 100 200 300 400 500 mm

SCALE MEASUREMENTS SHOWN IN MILLIMETRES.
ACCURACY OF SCALE CAN ONLY BE ASSURED ON
PROPERLY CALIBRATED MACHINERY

© Copyright

PLANNING NOTES
-

DEMOLITION NOTES
-

CONSTRUCTION NOTES
-All dimensions must be checked on site and not scaled from this drawing

MAINTENANCE NOTES
-

Revisions

A	18-03-26	Updates

VERITY & BEVERLEY
ARCHITECTS DESIGNERS
The Coach House | 4 The Chipping | Tetbury | Glos. | GL8 8ET
Telephone 01666 503516 | www.verity-beverley.co.uk

APPLETREES
SUTTON BENGER

ALTERATIONS & EXTENSION

PROPOSED CILL & HEAD DETAIL

Scale:	1:5, 1:2 & 1:1	23.1564/113
Date:	Nov 2025	
Drawn:	DLS	
Size:	A3	A