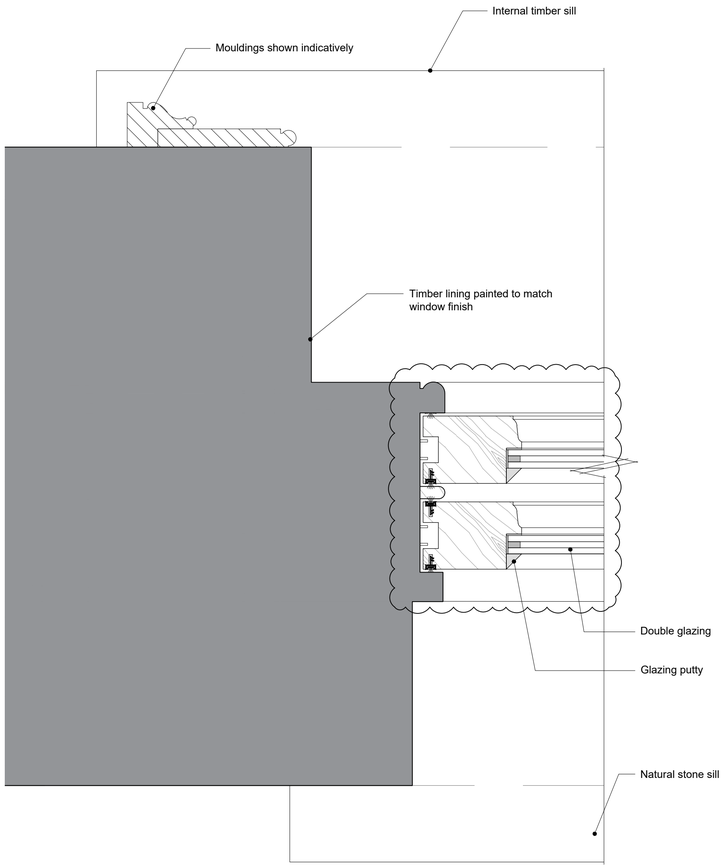

01 743.3 Window Type A4 - Sash Box Jamb Detail

SCALE 1:2 @ A1

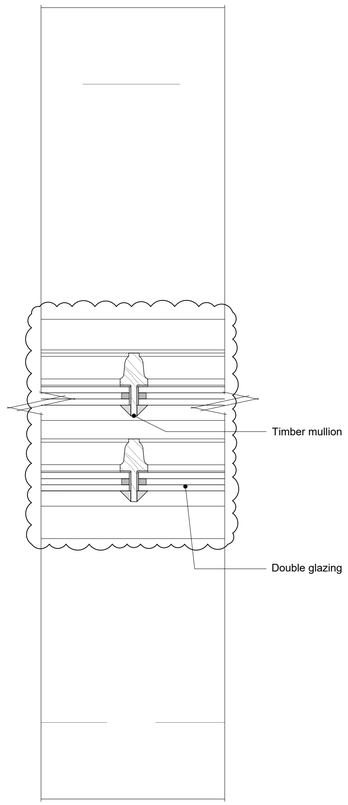

02 743.3 Window Type A4 - Mullion Detail

SCALE 1:2 @ A1

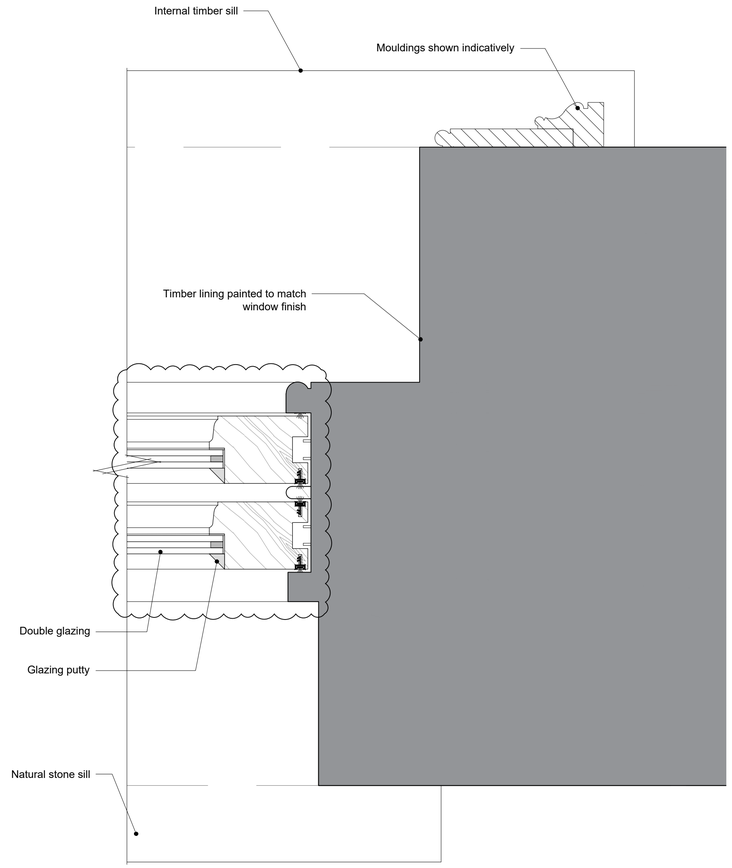

03 743.3 Window Type A4 - Sash Box Jamb Detail

SCALE 1:2 @ A1

Scale 1:2@A1

0 20 60 100 140 180 200mm

No.	Notes
1.	Dimensions to be verified on site. Only figured dimensions to be used and any discrepancies in dimensions are to be reported to the architect. No dimensions are to be scaled from printed drawings. Any areas indicated on this drawing are for guidance only. No responsibility is taken for their accuracy.
2.	There is a risk of injury or death in construction if the works are not properly planned and supervised. The contractor must not undertake any element of the work without first having carried out the necessary risk assessments and prepared detailed method statements.

FOR PLANNING

no.	revision.	date.
P2	Glazing type and annotations amended, external sash pulls removed, sill size increased	26/03/26
P1	Initial Release	dd/mm/yy

BLDA ARCHITECTS

RIBA Chartered Practice
211 Design Centre East
Chelsea Harbour
London, SW10 0XF
mail@blda.co.uk
www.blda.co.uk
t +44 (0) 20 7838 5555
f +44 (0) 20 7838 5556

Job: TH - Walled Garden Buildings

Title: Typical Window Details
Window Type - A4
Sheet 3 of 3

Type: 740-750 Typical Window Details

Status: FOR PLANNING

drawn by	JM	checked by	DY	approved by	DY
scale	1:2 @ A1	size	A1	date	26/03/26
job number		drawing number		revision	
3124		743.3		P2	