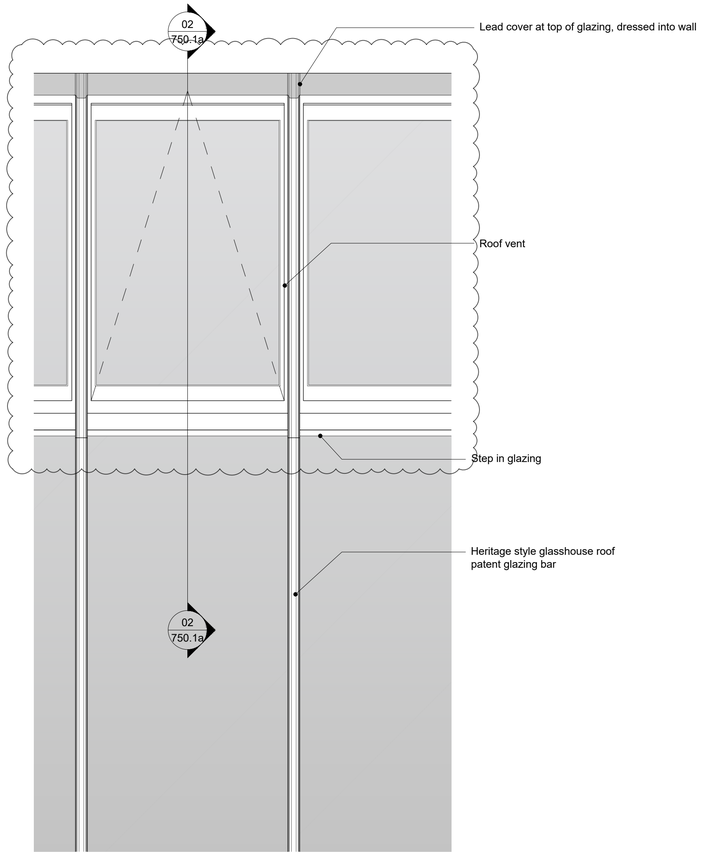

01 751.1a Window Type RF2 - Glasshouse Roof Vent Plan
SCALE 1:10 @ A1

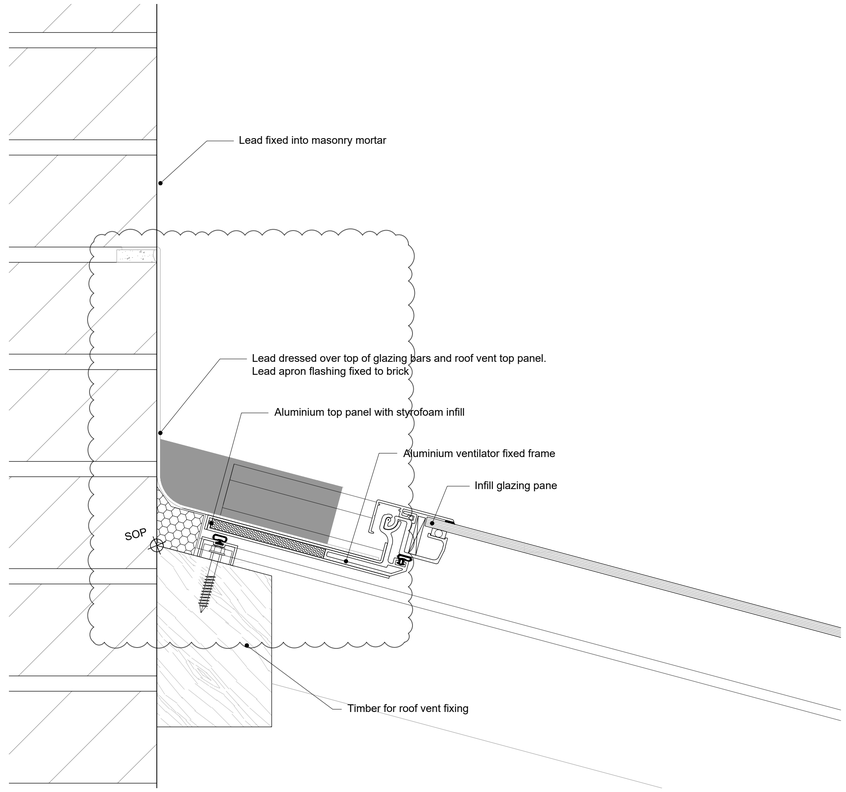

03 751.1a Window Type RF2 - Brick Wall Abutment Detail
SCALE 1:2 @ A1

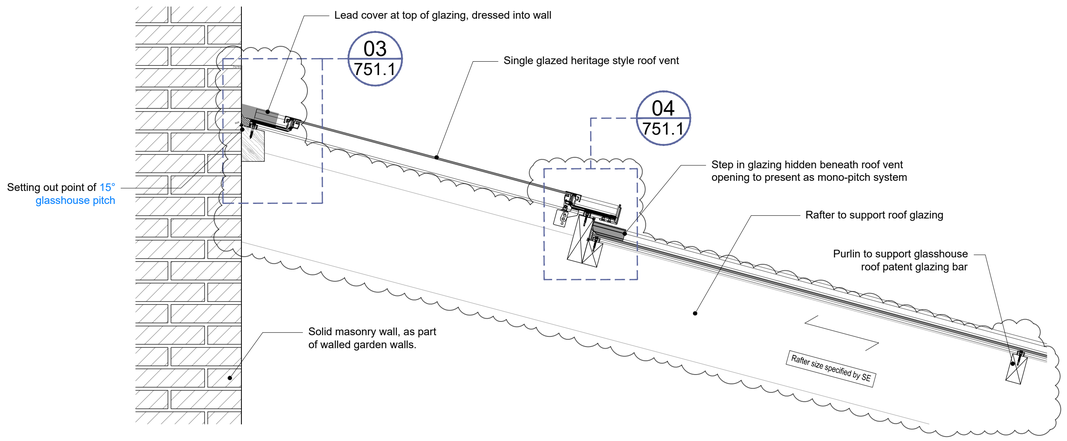

02 751.1a Window Type RF2 - Glasshouse Roof Vent Section
SCALE 1:10 @ A1

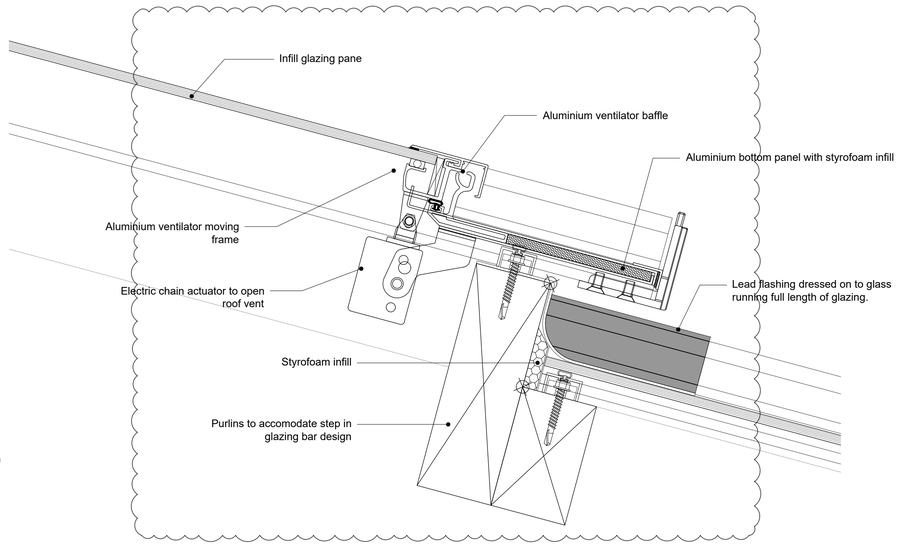

04 751.1a Window Type RF2 - Roof Vent Opening Detail
SCALE 1:2 @ A1

Scale 1:10@A1
0 0.1 0.2 0.4 0.6 0.8 1m

Scale 1:2@A1
0 20 60 100 140 180 200mm

No.	Notes
1.	Dimensions to be verified on site. Only figured dimensions to be used and any discrepancies in dimensions are to be reported to the architect. No dimensions are to be scaled from printed drawings. Any areas indicated on this drawing are for guidance only. No responsibility is taken for their accuracy.
2.	There is a risk of injury or death in construction if the works are not properly planned and supervised. The contractor must not undertake any element of the work without first having carried out the necessary risk assessments and prepared detailed method statements.

For Planning

no.	revision.	date.
P3	Introduction of step in glazing, further detailing in lead dressing and structure developed with SE	12/06/26
P2	Drawing number changed	02/03/26
P1	Initial release	dd/mm/yy

BLDA ARCHITECTS

RIBA Chartered Practice
211 Design Centre East
Chelsea Harbour
London, SW10 0XF
mail@blda.co.uk
www.blda.co.uk
t +44 (0) 20 7838 5555
f +44 (0) 20 7838 5556

Job: TH - Walled Garden Buildings

Title: Typical Window Details WTRF2 P3
Rooflight Type - RF2
Sheet 1 of 1

Type: Building 14 & 17

Status: FOR PLANNING

drawn by	JM	checked by	-	approved by	-
scale	1:10 @ A1	size	A1	date	12/06/26
job number		drawing number		revision	
3124		751.a		P3	