No. Notes

1. Dimensions to be verified on site. Only figured dimensions to be used and any discrepancies in dimensions are to be reported to the architect. No dimensions are to be scaled from printed drawings. Any areas indicated on this drawing are for guidance only. No responsibility is taken for their accuracy.

2. There is a risk of injury or death in construction if the works are not properly planned and supervised. The contractor must not undertake any element of the work without first having carried out the necessary risk assessments and prepared detailed method statements.

Profile E

Scale 1:1@A1

0 50mm

0 0.5 1 2

Scale in Metres @ 1:20

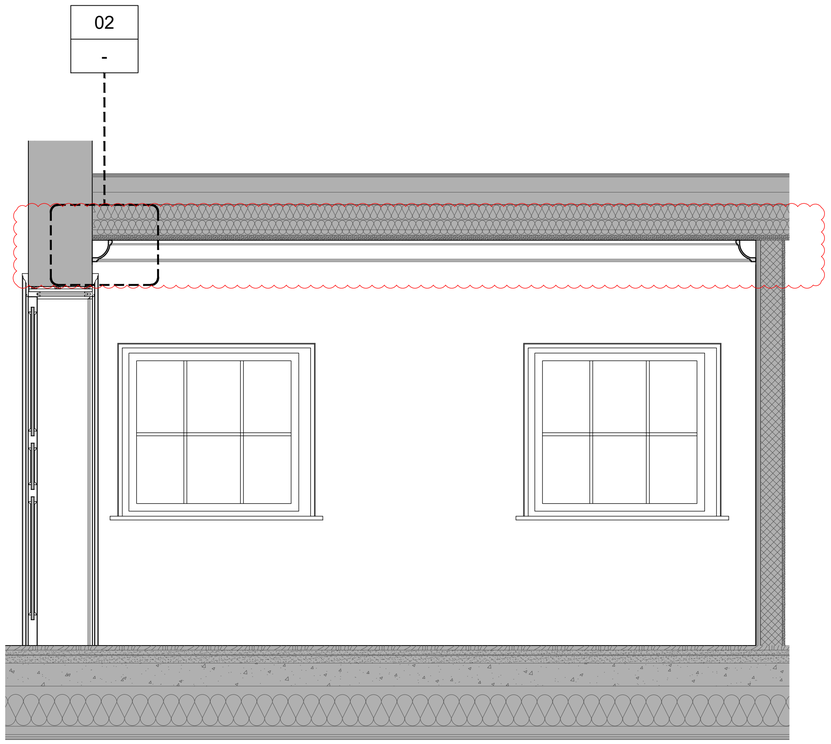

01 - Typical Elevation - First Floor

1:20 @ A1 / 1:40 @ A3

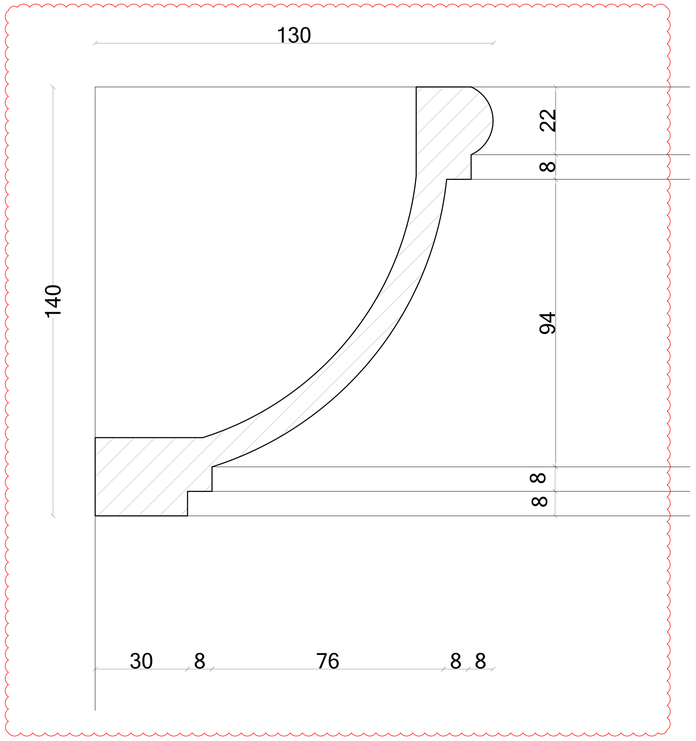

02 - Plaster Cornice - Profile E

1:1 @ A1 / 1:2 @ A3

no.	revision.	date.
D	Cornice type E size reduced by ID	01/05/26
C	Issued for Construction	23/02/26
B	Change of Status - Amendment following planning consultant comments	16/01/26
A	Change of Status	14/01/26
*	Initial Release	08/01/26

BLDA ARCHITECTS

RIBA Practice
Chartered Practice

211 Design Centre East
Chelsea Harbour
London, SW10 0XF

mail@blda.co.uk
www.blda.co.uk
t +44 (0) 20 7838 5555
f +44 (0) 20 7838 5556

Job: Tottenham House - The Old Stables

Title: First Floor
Proposed Cornice Types
Elevation & Detail

Type: 700 Component

Status: FOR PLANNING

drawn by	RM	checked by	----	approved by	----
scale	1:1 @ A1	size	A1	date	01/05/26
job number		drawing number		revision	
3123		748		D	