STABLE DOORS

OPEN IN: 68mm Jambs Section

31/05/2023 REVISION G

FILE: SD1-03SX

Ovolo profile shown,
also available with Lambs Tongue profile.

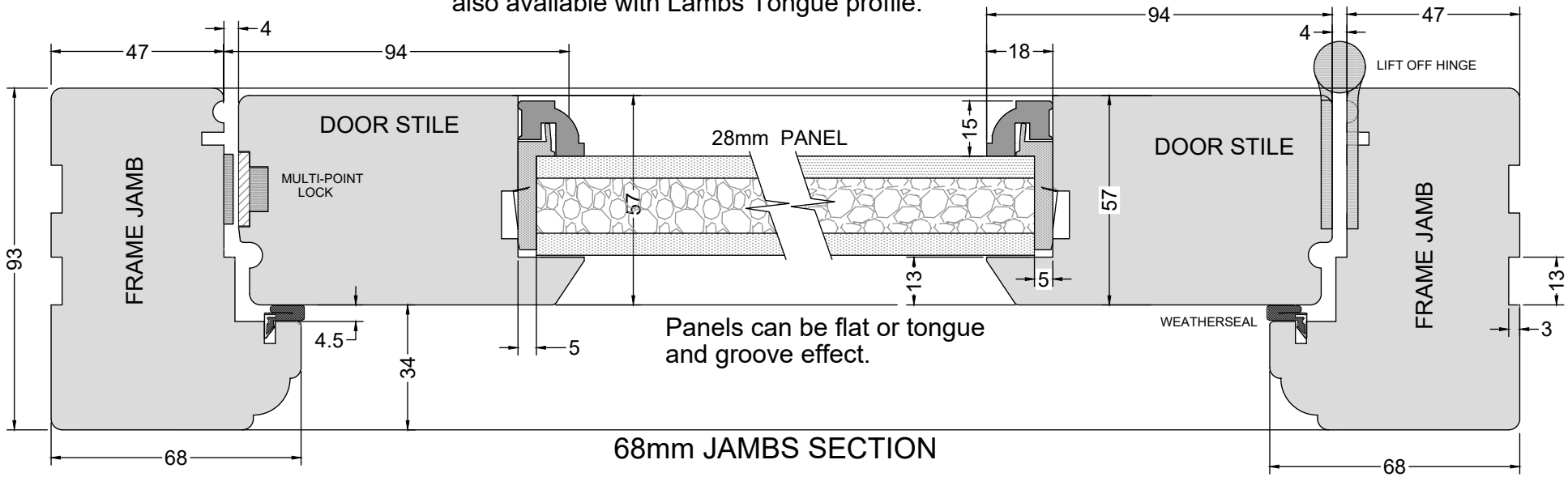

Panels can be flat or tongue
and groove effect.

68mm JAMBS SECTION

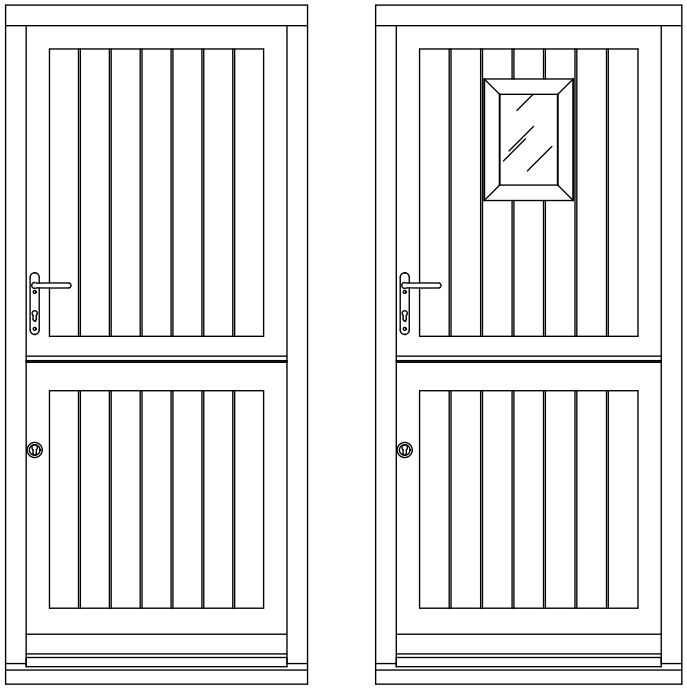

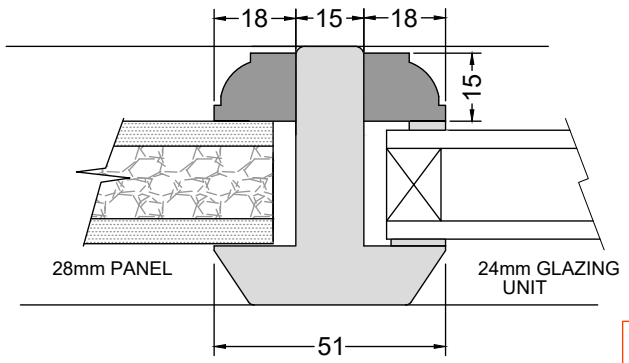

View Pane Detail

Note: Door can be either Left
or Right-hand opening

With or witout view Pane

DUE TO PROGRESSIVE DEVELOPMENT
MUMFORD & WOOD LIMITED RESERVE
THE RIGHT TO MODIFY OR CHANGE
SPECIFICATIONS WITHOUT PRIOR NOTICE

THIS DRAWING & SPECIFICATIONS ARE THE PROERTY OF MUMFORD & WOOD Ltd. THEY ARE ISSUED IN STRICT CONFIDENCE AND SHALL NOT BE REPRODUCED, COPIED OR USED AS THE BASIS FOR MANUFACTURING WITHOUT WRITTEN PERMISSION.

MUMFORD & WOOD
EST. 1984

TOWER BUSINESS PARK,
KELVEDON ROAD
TIPTREE, ESSEX
CO5 0LX
Tel: 01621 818155 FAX: 01621 818175
EMAIL: sales@mumfordwood.com
WEB: www.mumfordwood.com

ALL MEASUREMENTS ARE FINISHED DIMENSIONS IN MM.

DO NOT SCALE DRAWING!