# General notes

1. All dimensions are in meters unless otherwise stated.
2. All levels are in meters.
3. This drawing is to be read in conjunction with all relevant Engineers and Architect's drawings, Specifications, Reports and Engineering Details.
4. Do not scale from this drawing.

## Drawing key

Application Site boundary

## Vehicle key

Path of vehicle wheel (forward)

Path of vehicle overhang (forward)

Path of vehicle wheel (reverse)

Path of vehicle overhang (reverse)

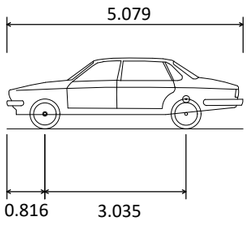


**Large Car (2006)**

| | |
|---|---|
| Overall Length | 5.079m |
| Overall Width | 1.872m |
| Overall Body Height | 1.525m |
| Min Body Ground Clearance | 0.310m |
| Max Track Width | 1.831m |
| Lock to lock time | 4.00s |
| Kerb to Kerb Turning Radius | 5.900m |

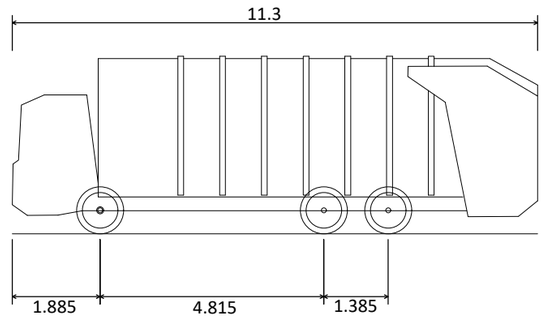


Wiltshire Council Refuse Vehicle

| | |
|---|---|
| Overall Length | 11.300m |
| Overall Width | 2.900m |
| Overall Body Height | 3.821m |
| Min Body Ground Clearance | 0.374m |
| Track Width | 2.900m |
| Lock to lock time | 4.00s |
| Kerb to Kerb Turning Radius | 9.500m |

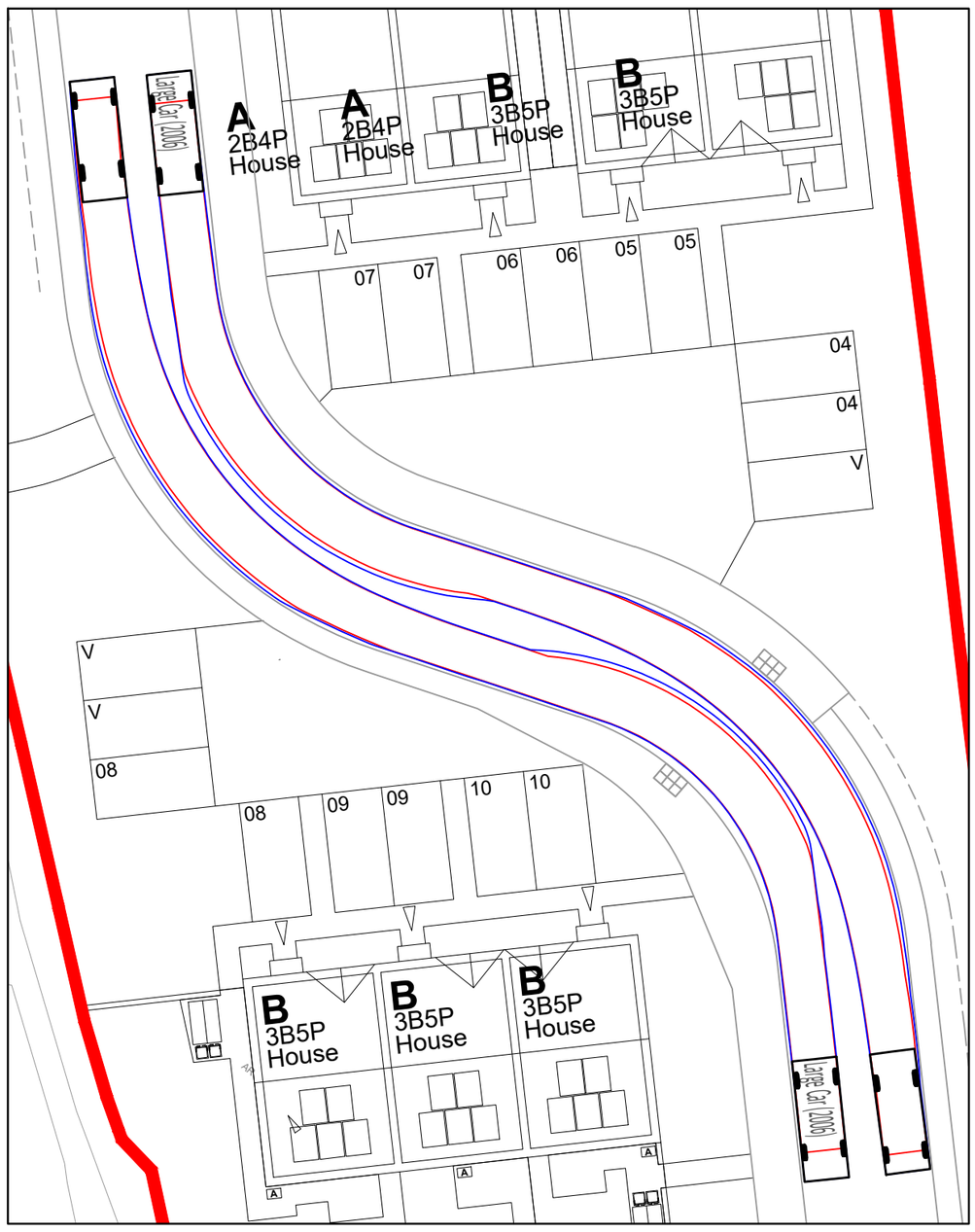


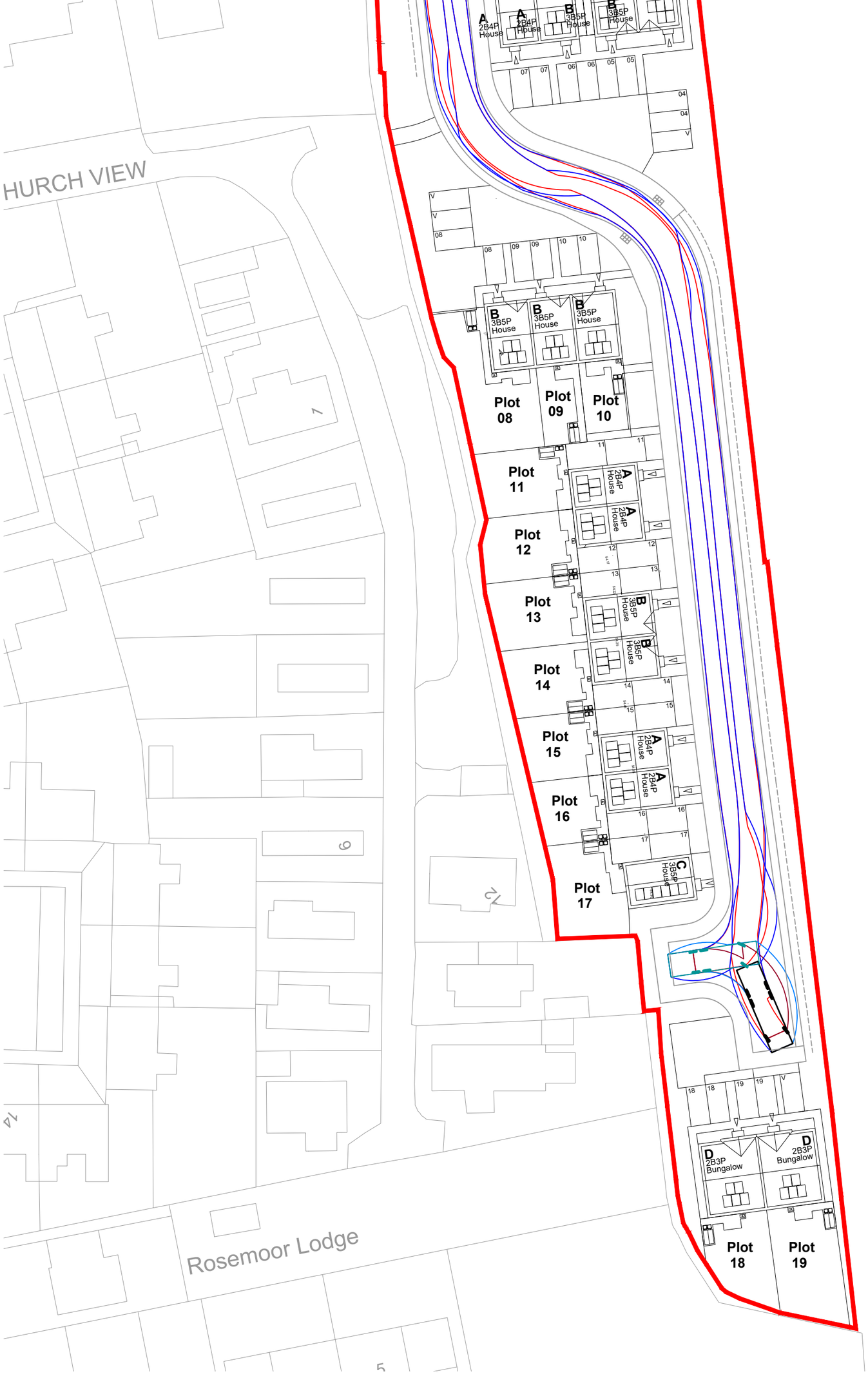


1:500m

0m 10m 20m 50m 100m

Drawing is not to be used for construction until status is CONSTRUCTION

**This drawing has been based/developed using the following external drawings**

| Type | Company | Drawing date | Drawing title | Date received | Rev |
|---|---|---|---|---|---|
| Site Layout | James Garner Architect | 17.07.2025 | 22072 0102-P15 Proposed Site Layout | 22.07.2025 | P15 |
| Topographical survey | Utility Mapping | 10.10.2023 | UM23-2208-MIN Sutton Benger-Topo | 13.11.2023 | - |
| OS Map | James Garner Architect | | 22072 001-P05 Feasibility Site Layout_Model Space | 04.10.2023 | - |

| | | | | | |
|---|---|---|---|---|---|
| Rev D | Updated to suit latest site layout | By AD | Checked | LC | 07.08.2025 |
| Rev C | Updated to suit Highways comments. | By GM | Checked | LC | 23.05.2024 |
| Rev B | Scale Bar added | By AD | Checked | SH | 04.01.2024 |
| Rev A | Updated to suit latest site layout | By AD | Checked | LC | 24.11.2023 |


jpp
- Infrastructure Design
- Structural Engineering
- Development Planning
- Professional Advice
- Geotechnical & Environmental
- Surveying

**Milton Keynes**
B2A, Denbigh Business Park, 23 First Avenue,
Denbigh, Milton Keynes. MK1 1DN
T: 01908 889433

**Northampton & Poole**

**E:** mail@jppuk.net **W:** jppuk.net


Client: Minster Property Group

Project: Proposed Residential Development at Land off Main Road, Sutton Benger

Title: Vehicle Tracking Layout

| Scale at A2 | Drawn by | Checked by | Date |
|---|---|---|---|
| 1:500 | AD | LC | October 2023 |

| Status | Project ref | Drawing no. | Revision |
|---|---|---|---|
| **FOR INFORMATION** | 25655 | 104 | D |