MUB 062 560D4 Multibox

Centrifugal box fan, insulated, flexible outlet

Item Number: 235397

Variant: 400V 3~ 50Hz - 90° air flow

- High efficient motor
- Speed-controllable via frequency converter
- Integral cold conductor (PTC)
- Low sound level
- Flexible airflow direction due to removable panels
- Installation in any mounting position
- Easy to maintain and reliable



The MUB fan are equipped with high efficient motors. The MUB fans have an impeller with backward curved blades, manufactured from aluminum. Speed control is only possible by using a frequency converter. Motor protection is done by cold conductors (PTC), which have to be connected to an external motor protection device. The casing consists of an aluminum frame with fiberglass reinforced plastic corners of PA6; highly shock-resistant. The double skin panels are manufactured from galvanized steel with 30 mm mineral wool insulation. To avoid condensation the profile is provided with a separate chamber to fix screws. The Multibox fans are delivered for straight through airflow but can easily be rebuilt due to removable panels. This allows flexible ventilation solutions. The MUB can also be used as extract- or supply air unit in air handling units. Installation in any mounting position is possible.

MUB with additional modules (filters, heaters etc.) are available as air handling units "K025, K042 or K062" on request!

Technical parameters

Nominal data		
Voltage (nominal)	400	V
Frequency	50	Hz
Phases	3~	
Input power	2,499	W
Input current	4.49	A
Impeller speed	1,456	rpm
Air flow	max 3.282	m³/s
Temperature of transported air	max 60	°C
Max temperature of transported air, when speed controlled	60	°C

Protection/Classification		
Enclosure class, motor	IP55	
Insulation class	F	

Data according to ErP	
ErP ready	ErP 2018

Dimensions and weights		
Weight	95.5	kg

Others	
Motor type	AC

Performance

Performance curve

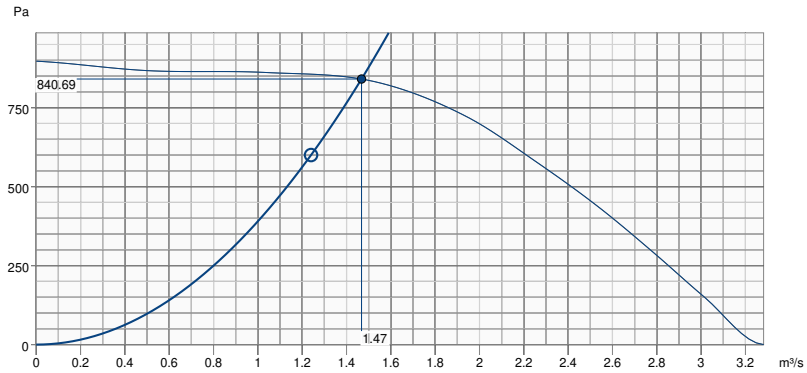

Hydraulic data	
Required air flow	1.24 m³/s
Required static pressure	600 Pa
Working air flow	1.47 m³/s
Working static pressure	841 Pa
Air density	1.204 kg/m³
Power	2305.7 W
Fan control - RPM	1460 rpm
Current	4.25 A
SFP	1.571 kW/m³/s
Control voltage	400.0 V
Supply voltage	400 V

Sound power level		63	125	250	500	1k	2k	4k	8k	Total
Inlet	dB(A)	50	69	72	76	77	75	73	65	82
Outlet	dB(A)	51	70	74	78	79	76	74	66	84
Surrounding	dB(A)	30	53	45	44	47	46	40	29	55
Sound pressure level at 3m (20m² Sabine)	dB(A)	-	-	-	-	-	-	-	-	48
Sound pressure level at 3m free field	dB(A)	-	-	-	-	-	-	-	-	34

Accessories

Dimension

MUB 062	□A	□B	□C	□D	E
560/630	820	820	720	678	21

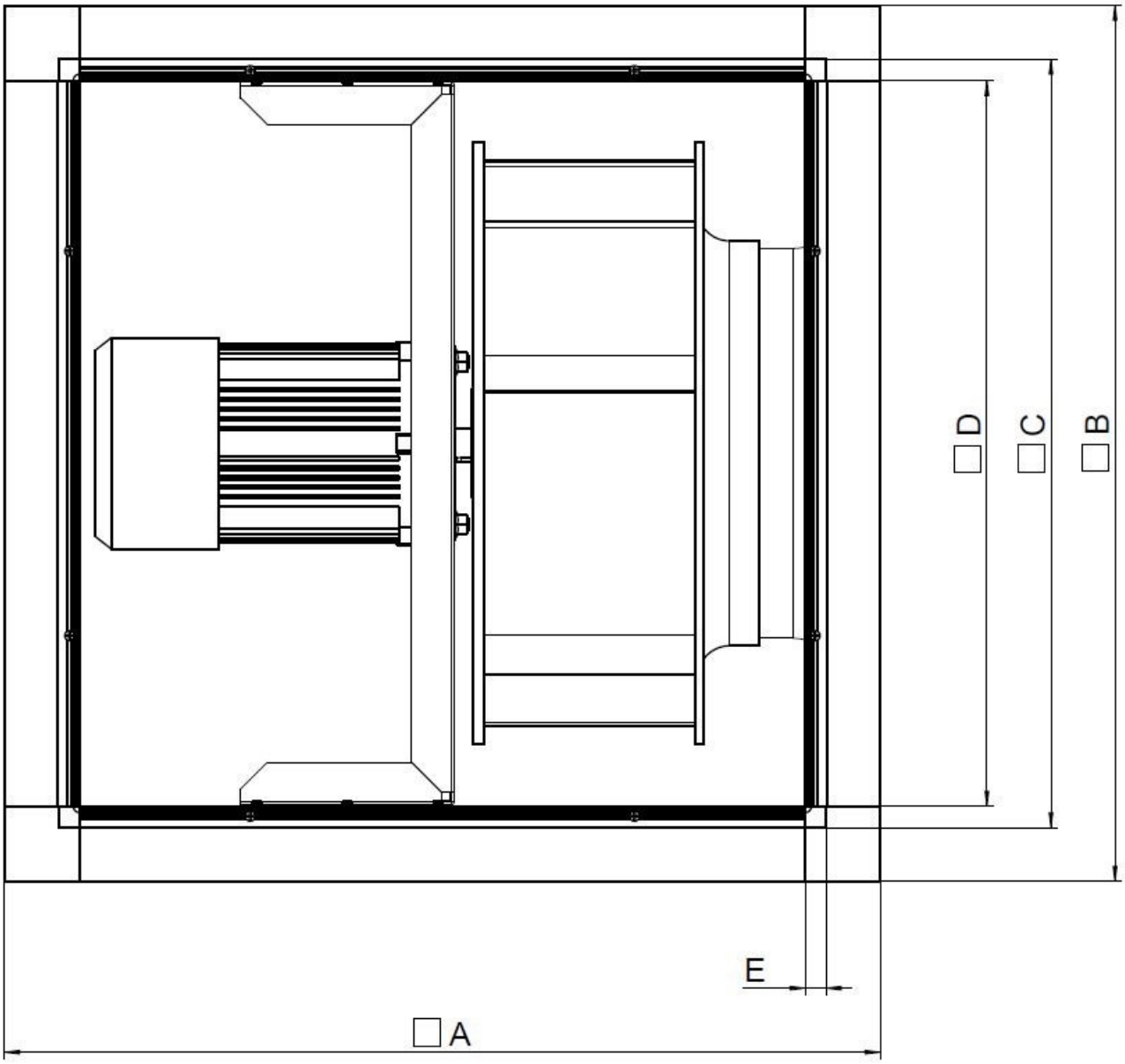

Wiring

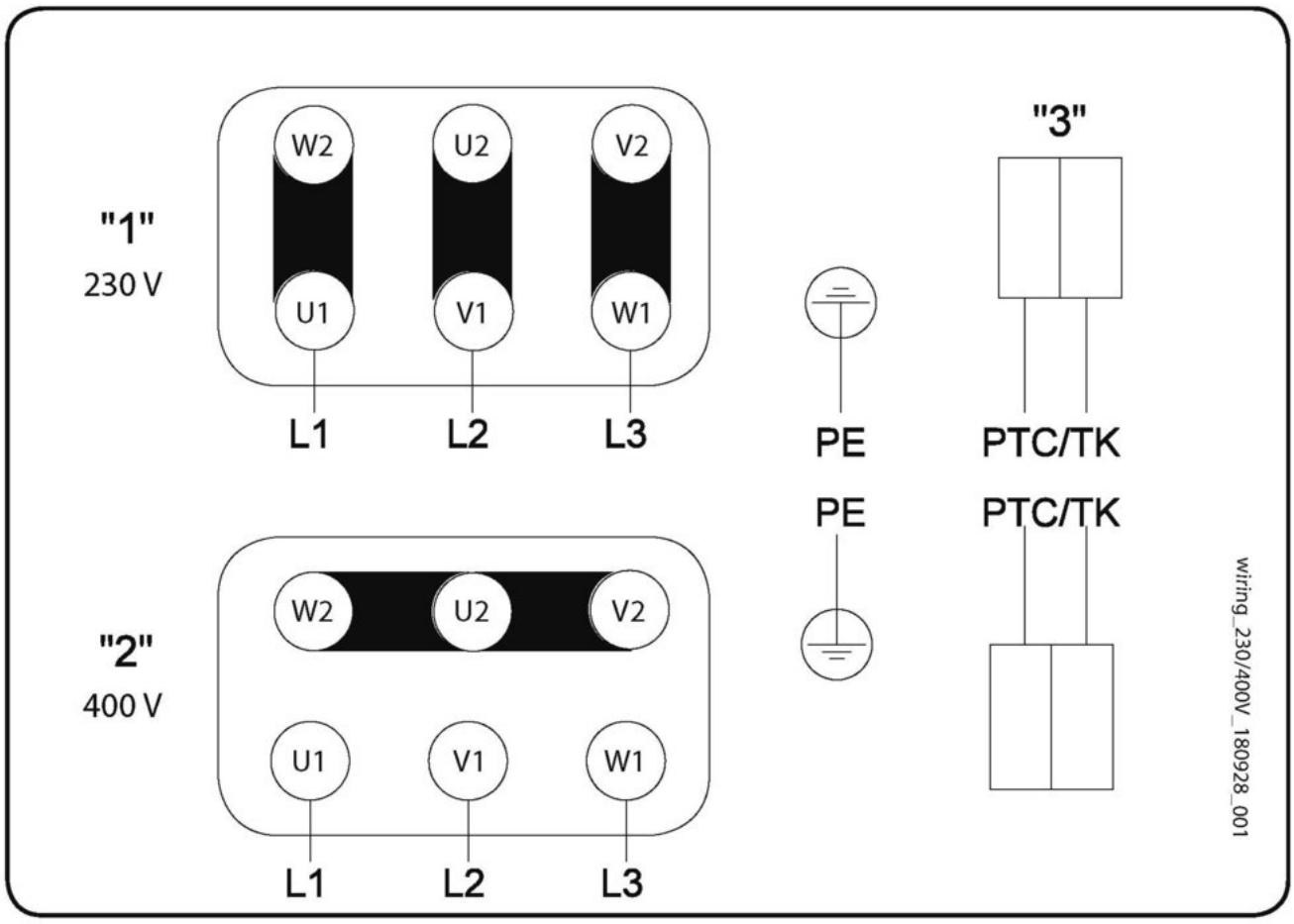

1	**3 x 230V Delta Connection**
2	3 x 400V Star connection
3	PTC / TK
-	Changing of direction of rotation by interchanging of two phases

Acoustic

The Level of Casing-Breakout-Noise depends on the quality of shielding the acoustic inlet and outlet noises.
The shown Level of Casing-Breakout-Noise will be reached only in case of 100 % shielding the acoustic inlet and outlet noise and a correspondingly low environment noise.

Ecodesign

Product		
Trade name	Systemair	
Product name	MUB 062 560D4 IE3	

Ecodesign		
ErP compliance	2018	
Unit category	NRVU	
Drive	External MSD or VSD	
Unit type	UVU	
Heat recovery type	None	
Temperature ratio (UVU)	Not applicable	
qv nom	1.8	m^3/s
P nom	2.465	kW
Ps nom	767	Pa
Fan efficiency	56.2	%
External Leakage	5	%
Sound power level LWA	84	dB(A)

Accessories

- FGV 062/716-716 flex. conn. (4198)
- Frequency converter FRQ5-10A (36230)
- Frequency converter FXDM5AM (31387)
- SD-MUB Vibration pad set (37324)
- U-EK230E Motor protection (30199)
- WSD 062 (860x860x70) complete (31482)
- Frequency converter FRQS-10A (36232)
- CCM inlet MUB062 d560 (311782)
- CCM outlet MUB062 d560 (311684)
- CCMI outlet 062 d560 KIT 30mm (239095)
- GRU 062 base frame h= 100mm (276662)
- KKC-DX-R 062 cooling section (277266)
- KKC-W-R 062 cooling section (277274)
- KKH-HW 062 heater-section (93340)
- Frequency converter FRQ-10A (36228)
- Frequency converter FRQ5S-10A (36234)
- REV-5POL/05-7,5kW R/Y (33979)
- TUNE-AHU-DE008-062-718x718-M0 (79882)
- UGS 062/630 adapter flex. (4358)
- WSG 062 MUB complete (31486)
- REV-5POL/07-EMV-7,5kW R/Y (34549)
- CCM inlet MUB062 d630 (311783)
- CCM outlet MUB062 d630 (311681)
- CCMI outlet 062 d630 KIT 30mm (239096)
- KKC-DX-L 062 cooling section (277262)
- KKC-W-L 062 cooling section (277270)
- KKF 30 062-filter-section (93312)
- KKS 062 silencer-section (276852)

Documents

- Installation, Operation and Maintenance instruction_001
- UKCA DECLARATION OF CONFORMITY_MUB_EN_002.PDF
- COMMISSIONING REPORT_FANS_160628_EN_001.PDF