

SITE PLAN 1:500

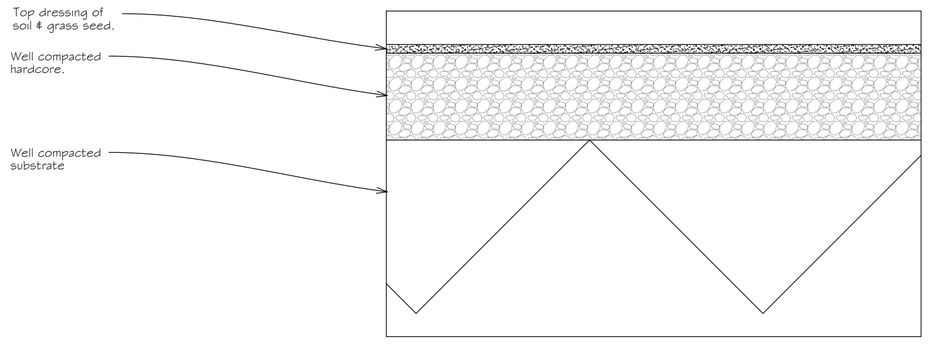

DRIVE DETAIL 1:5

Hedges

Mixed Native Hedge:
50% Catraegus Monogyna (Hawthorn) 60 - 80cm
10% Euonymus europaeus (Spindle) 60 - 80cm
30% Ligustrum vulgare (Wild Privet) 60 - 80cm
10% Viburnum opulus (Gueldea Rose) 50 - 60cm

To be planted 4 plants per linear metre in two staggered rows 400mm apart.
Total length of hedging approximately 187.5m
Total no. of plants approximately 748

General Landscaping Notes:

1. All plants, materials & workmanship to comply with relevant British Standards/Codes of Practice
2. Topsoil to be provided to minimum depth of 300mm to all areas of hedge planting and to tree pits first excavated to minimum 750mm diameter and 600mm deep. Subsoil below to be first well broken up to 150mm further depth.
3. Compost and slow release fertiliser to be incorporated with all planting.
4. Tree positions to be first checked on site against final alignments of all drainage and service runs and in relation to foundations of all structures if any shrinkable subsoil is suspected; any consequent precautions or adjustments to be agreed accordingly.

Maintenance:

All new landscaping planting shown; including all shrubs, trees and hedge planting shall be maintained free from weeds and shall be protected from damage by vermin and stock. Any trees or plants which, within a period of five years, die, are removed, or become seriously damaged or diseased shall be replaced in the next planting season with others of a similar size and species, unless otherwise agreed in writing by the local planning authority.

Rev Date Notes

lpc
TOWN AND COUNTRY PLANNING DEVELOPMENT CONSULTANTS
LPC (TRULL) LTD.,
TRULL, TETBURY, GLOUCESTERSHIRE GL8 8SQ
Tel: 01285 841433 email: admin@lpctrull.com

Client
Mr J Holland
Project
Land North of Queen Street, Braydon SN16 9RL
Drawing
Site Plan

Date: December 2023 Scale: 1:500 & 1:5 @ A1
Drawing Number
LPC 5661 EX 03