General Notes

1. All dimensions are in metres unless otherwise stated.
2. All levels are in metres.
3. This drawing is to be read in conjunction with all relevant Engineers and Architect's drawings, Specifications, Reports and Engineering Details.
4. Do not scale from this drawing.

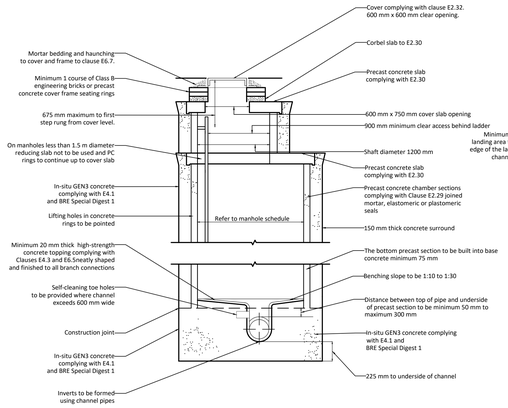

SECTION A-A

SHAFT DIAMETERS	
Dia of largest pipe in MH (mm)	Int. Dia of MH (mm)
Less than 375	1200
375 to 450	1350
500 to 750	1500
750 to 900	1800
Greater than 900	Pipe diameter + 900

For every two additional incoming pipes, the diameter of the manhole shall be increase by 150mm.

Note: For clauses referenced above refer to Water UK Sewerage Sector Guidance Appendix C'

NOTE: All insitu concrete shall be sulphate resisting unless agreed otherwise

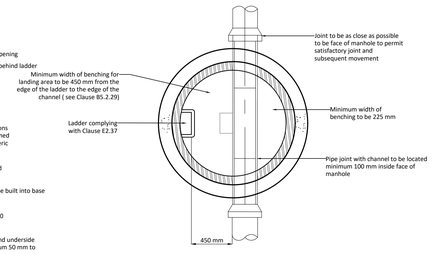

minimum from edge of stepping (See Clause B5.2.29)

Note: Opening to be located centrally over 900 mm shaft and offset approximately 200 mm for 1200 mm diameter shaft with ladder

PLAN

ROCKER PIPES	
Pipe diameter (mm)	Effective Length (mm)
150 to 600	600

Note: For clauses referenced above refer to 'Water UK Sewerage Sector Guidance Appendix C'

Precast Concrete Manhole Type A
Depth from cover level to soffit of pipe 3.0 m to 6.0 m with ladder and reducing slab
Rigid material construction with concrete surround

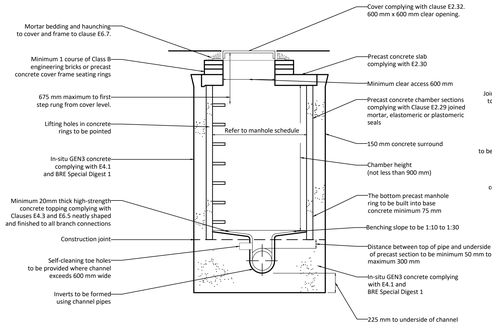

SECTION A-A

SHAFT DIAMETERS	
Dia of largest pipe in MH (mm)	Int. Dia of MH (mm)
Less than 375	1200
375 to 450	1350
500 to 750	1500
750 to 900	1800
Greater than 900	Pipe diameter + 900

For every two additional incoming pipes, the diameter of the manhole shall be increase by 150mm.

Note: For clauses referenced above refer to Water UK Sewerage Sector Guidance Appendix C'

NOTE: All insitu concrete shall be sulphate resisting unless agreed otherwise

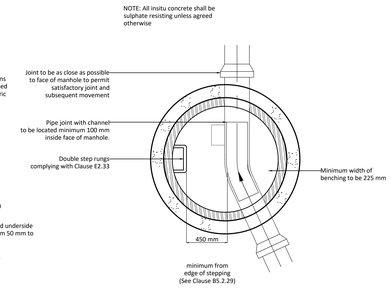

minimum from edge of stepping (See Clause B5.2.29)

PLAN

ROCKER PIPES	
pipe diameter (mm)	Effective length (mm)
150 to 600	600
over 600	1000
over 750	1250

Note: For clauses referenced above refer to Water UK Sewerage Sector Guidance Appendix C'

Precast Concrete Manhole Type B
Depth from cover level to soffit of pipe 1.5 m to 3.0m
Alternative rigid material construction with concrete surround

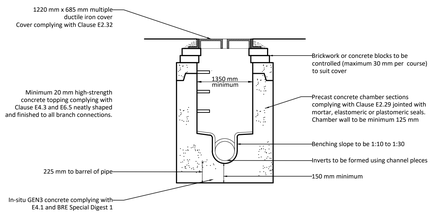

SECTION A-A

SHAFT DIAMETERS	
Dia of largest pipe in MH (mm)	Int. Dia of MH (mm)
Up to 375	1350
375 to 450	1350

For every two additional incoming pipes, the diameter of the manhole shall be increase by 150mm.

Note: For clauses referenced above refer to 'Water UK Sewerage Sector Guidance Appendix C'

If the pipe diameter exceeds 375mm, manhole types B or C shall be used

Internal dimensions of manhole normally 1350 mm but manhole diameter should be increased for pipes larger than 450 mm diameter to give 225 mm benching in accordance with BS.2.29

NOTE: All insitu concrete shall be sulphate resisting unless agreed otherwise

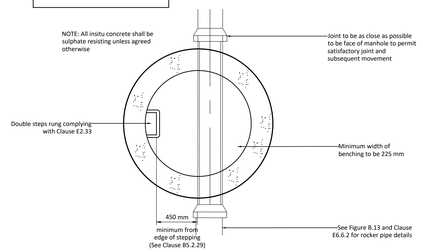

Note: The use of precast concrete chamber units to E2.29 with 150 mm GEN3 in-situ concrete complying with E4.1 and BRE Special Digest 1 in place of brickwork construction is permitted

PLAN

ROCKER PIPES	
Pipe diameter (mm)	Effective Length (mm)
150 to 600	600

Note: For clauses referenced above refer to 'Water UK Sewerage Sector Guidance Appendix C'

Precast Concrete Manhole Type C
Depth from cover level to soffit of pipe less than 1.5m
Maximum pipe size 450 mm diameter
Rigid material construction

Table 1: Operation and maintenance requirements for Permeable Pavements

Maintenance schedule	Required action	Record frequency
Regular maintenance	Brushing and vacuuming (standard cosmetic sweep over whole surface)	Monthly Monthly (during growing season) or as required Half yearly: Spring (before nesting season) and Autumn Monthly at start, then as required
Occasional maintenace	Stabilise and mow contributing and adjacent areas. Removal of weeds or management using glyphosate applied directly into the weeds by an applicator rather than spraying	As required As required - once per year on less frequently used pavement
Remedial actions	Remediate any landscaping which, through vegetation maintenance or soil slip, has been raised to within 50mm of the level of the paving Remedial work to any depressions, rutting and cracked or broken blocks considered detrimental to the structural performance or a hazard to users, and replace lost jointing material Rehabilitation of surface and upper substructure by remedial sweeping	As required As required Every 10 to 15 years or as required (if infiltration performance is reduced due to significant clogging)
Monitoring	Initial inspection Inspect for evidence of poor operation and/or weed growth - if required, take remedial action Inspect silt accumulation rates and establish appropriate brushing frequencies Monitor inspection chambers	Monthly for three months after installation Three-monthly, 48 h after large storms in first six months Annually Annually

Table 2: Operation and maintenance requirements for detention basin

Maintenance schedule	Required action	Record frequency
Regular maintenance	Remove litter, debris and trash Cut grass - for landscaped areas and access routes Cut grass - meadow grass in and around basin Manage other vegetation and remove nuisance plants	Monthly Monthly (during growing season) or as required Half yearly: Spring (before nesting season) and Autumn Monthly at start, then as required
Occasional maintenace	Reseed areas of poor vegetation Prune and trim trees and remove cuttings Remove sediment from pre-treatment system when 50% full	As required As required As required
Remedial actions	Repair erosion or other damage by reseeding or returfing Repair or rehabilitate inlets, outlets and overflows Relevel uneven surfaces and reinstate design levels	As required As required As required
Monitoring	Inspect inlets, outlets and overflows for blockages, and clear if required Inspect banksides, structures, pipework etc for evidence of physical damage Inspect inlets and pre-treatment systems for silt accumulation; establish appropriate silt removal frequencies Inspect infiltration surfaces for compaction and ponding	Monthly Monthly Half yearly Monthly

Table 4: Operation and maintenance requirements for flow control devices

Maintenance schedule	Required action	Record frequency
Regular maintenance	Inspect and identify areas that are not operating correctly. If required, take remedial action Debris removal from catchment surface (where may cause risks to performance) Remove sediment from pre-treatment structures	Monthly (for the fist 3 months) then six monthly Monthly Annually or as required
Remedial actions	Remove blockages Cleaning/jetting Repair/rehabilitation of system	As required As required As required
Monitoring	Inspect/check all part of piped system and inspection chambers to ensure that they are in good condition and operating as required	Annually and after large storms

Table 5: Operation and maintenance requirements for geo-modular attentuations tanks

Maintenance schedule	Required action	Record frequency
Regular maintenance	Inspect and identify areas that are not operating correctly. If required, take remedial action Debris removal from catchment surface (where may cause risks to performance) Remove sediment from pre-treatment structures and/or internal forebays	Monthly (for the fist 3 months) then six monthly Monthly Annually or as required
Remedial actions	Repair/rehabilitation all inlets, outlets, overflows and vents	As required
Monitoring	Inspect/check all inlets, outlets, vents and overflows to ensure that they are good working condition and operating as designed	Annually and after large storms

Table 6: Operation and maintenance requirements for pipes, gullies and manholes

Maintenance schedule	Required action	Record frequency
Regular maintenance	Inspect and identify areas that are not operating correctly. If required, take remedial action Debris removal from catchment surface (where may cause risk to performance) Remove sediment from pre-treatment structure (e.g. gullies) Clearing/jetting of annually, or as required, pipes and manholes	Monthly for first 3 months and then six monthly Monthly Annually or as required As required

Drawing is not to be used for construction until status is CONSTRUCTION

jpp
- Infrastructure Design
- Structural Engineering
- Development Planning
- Professional Advice
- Geotechnical & Environmental
- Surveying

Milton Keynes
B2A, Denbigh Business Park, 23 First Avenue, Denbigh, Milton Keynes. MK1 1DN
T: 01908 889433
Northampton & Poole
E: mail@jppuk.net **W:** jppuk.net

Client	Minster Property Group (Sutton Benger) Ltd & Curo Finance Limited
Project	Proposed Residential Development at Land off Main Road, Sutton Benger
Title	Drainage Construction Details (Sheet 1)

Scale at A0	NTS	Drawn by	ARJ	Checked by	LC	Date	November 2023
Status		Project ref		Drawing no.		Revision
FOR PLANNING		25655		103(1)		