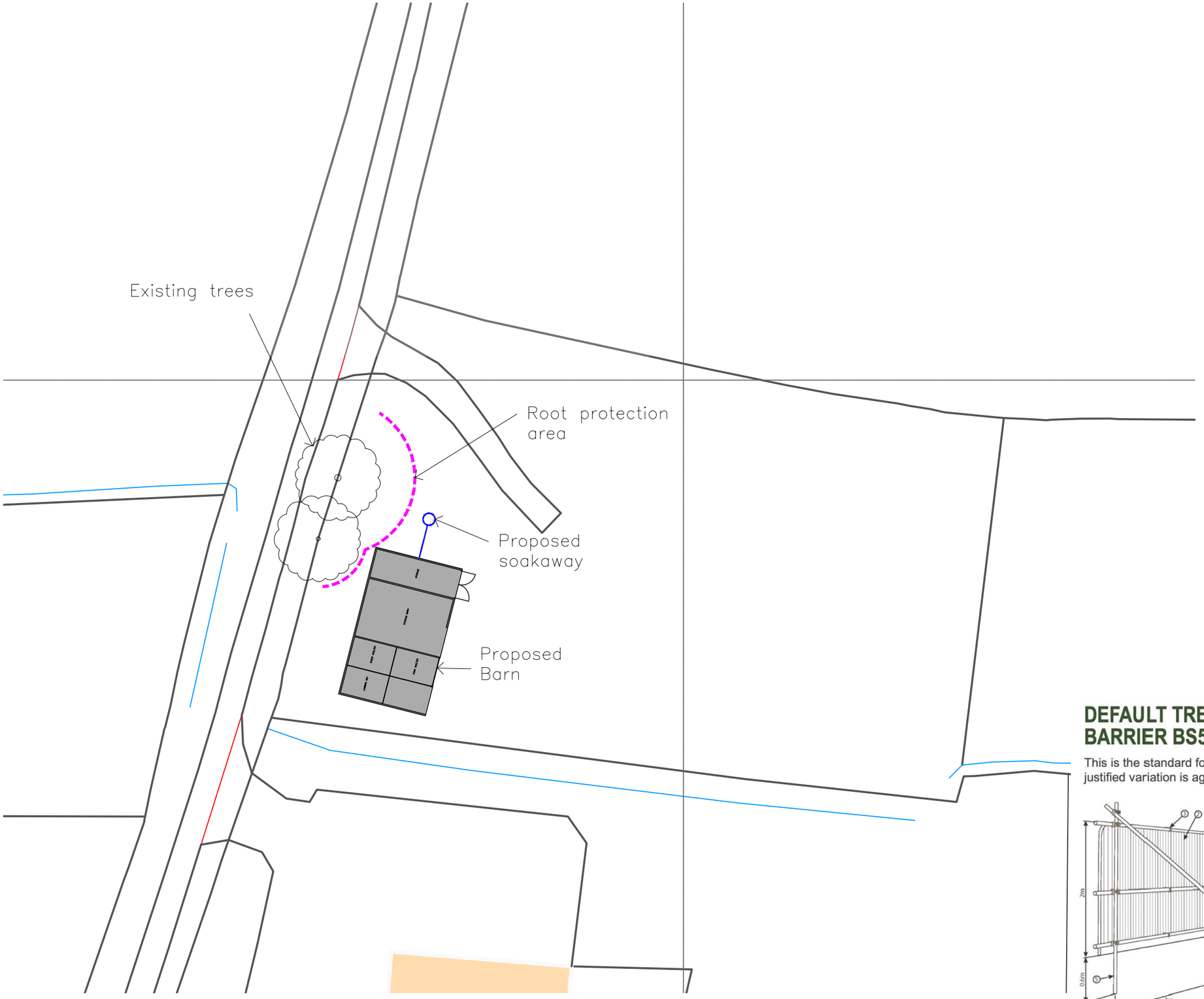

BLOCK PLAN 1:500

1:500

10m 0 10m 20m 30m 40m 50m

PROPOSED BARN

DEFAULT TREE PROTECTION BARRIER BS5837

This is the standard for all situations unless a justified variation is agreed with the LPA

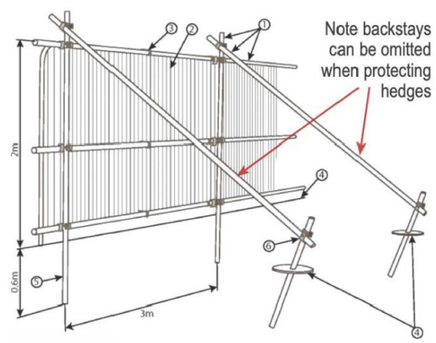

① Standard scaffold poles
② Heavy gauge 2m tall galvanised tube and welded mesh infill panels
③ Panels secured to uprights and cross-members with wire ties
④ Ground level
⑤ Uprights driven into the ground until secure (minimum depth 0.6m)
⑥ Standard scaffold clamps

THE FIELDS
UPPER CHEDGLOW
MALMESBURY
SN16 9HA

MR & MRS N. MOFFAT

Title

BLOCK PLAN

AS PROPOSED

CHURCH + HASTINGS

Rory Brock
M: 07712 259378

April Church
M: 07979 541397

Drawn	RWB
Scale	1:500 @ A3
Date	OCT 2023

Drawing Number

102 A

Revisions