

A - A

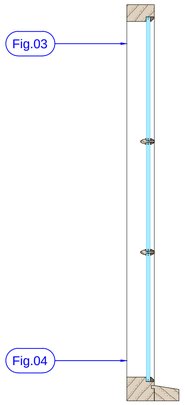

B - B

2 No TO THIS
REF: WINDOW 19, 27
EXTERNAL ELEVATION

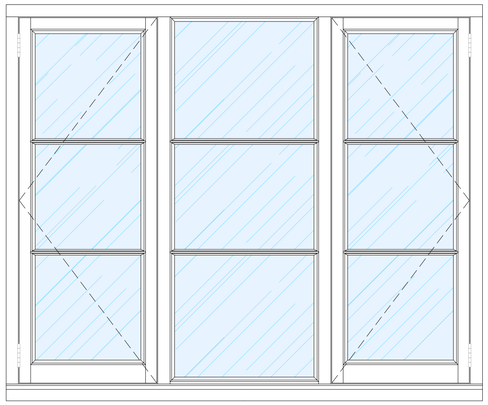

1 No TO THIS
REF: WINDOW 16
EXTERNAL ELEVATION

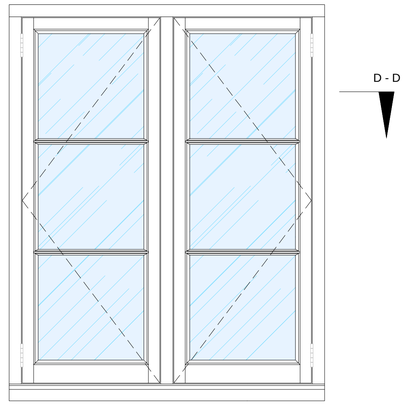

1 No TO THIS
REF: WINDOW 20
EXTERNAL ELEVATION

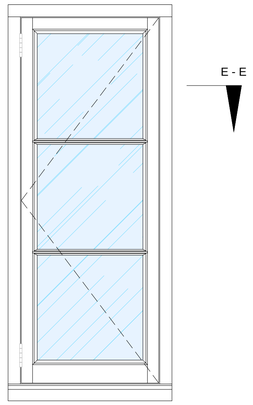

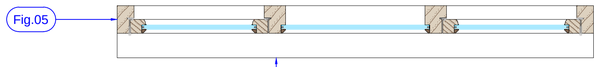

C - C

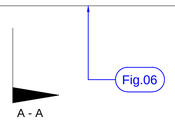

A - A

B - B

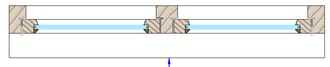

D - D



E - E

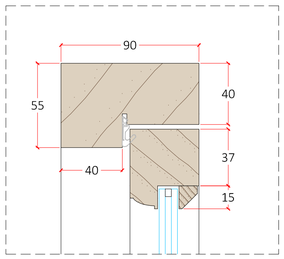

01 FIG.01
Scale: 1:2

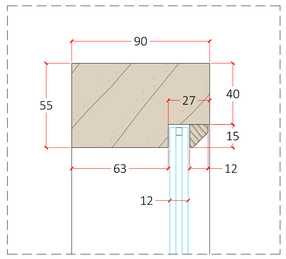

03 FIG.03
Scale: 1:2

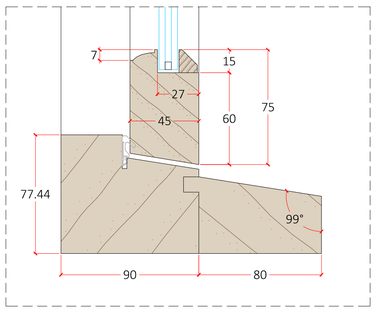

02 FIG.02
Scale: 1:2

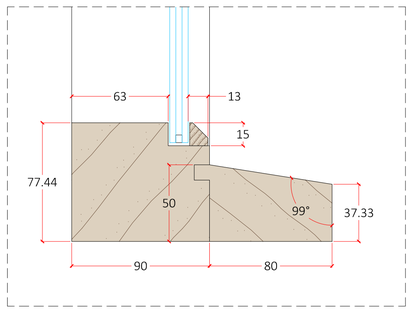

04 FIG.04
Scale: 1:2

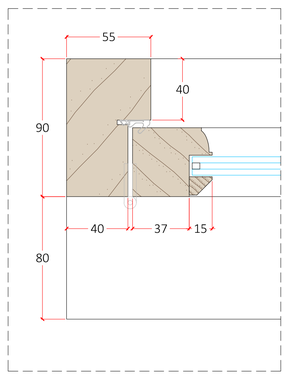

05 FIG.05
Scale: 1:2

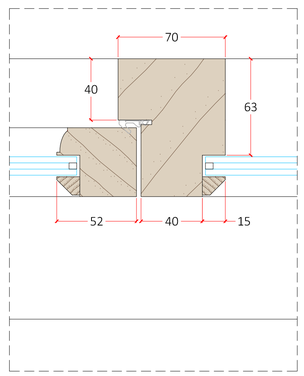

06 FIG.06
Scale: 1:2

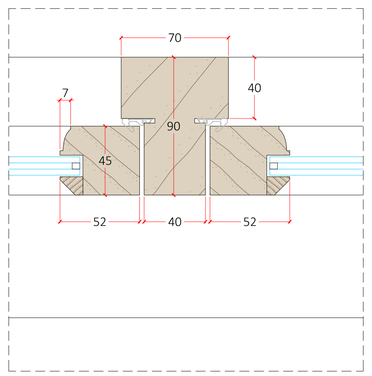

07 FIG.07
Scale: 1:2

ALL DIMENSIONS TBC BY SITE SURVEY
PRIOR TO MANUFACTURE

OPEN OUTWARD CASEMENT WINDOWS			
WINDOW REF NO.	DESCRIPTION	WIDTH	HEIGHT
Window #16	2-Sash casement	1052mm	980mm
Window #19	2-Sash casement	1555mm	1293mm
Window #20	1-Sash casement	589mm	1293mm
Window #27	2-Sash casement	1594mm	990mm

Drawing title:
TYPICAL OPEN OUTWARD CASEMENT WINDOW
Project:
32a - 36 PARK ST
DEVIZES, SN10 1DZ

Drawn by:	Date:
Jon Lewis	21.03.24
Drawing No:	**Revision:**
0103-03	F

Revisions:

Rev	Date	Notes
A	22.03.24	Drawing pack updated
B	25.03.24	Minor updates
C	15.04.24	Scale bars added
D	20.05.24	Updated to client comments
E	06.06.24	Updated to client comments
F	04.09.24	Updated to client comments

KINGSDOWN

www.kingsdownjoinery.co.uk
harryw@kingsdownjoinery.co.uk
07512 757199

© NO UNAUTHORISED REPRODUCTION