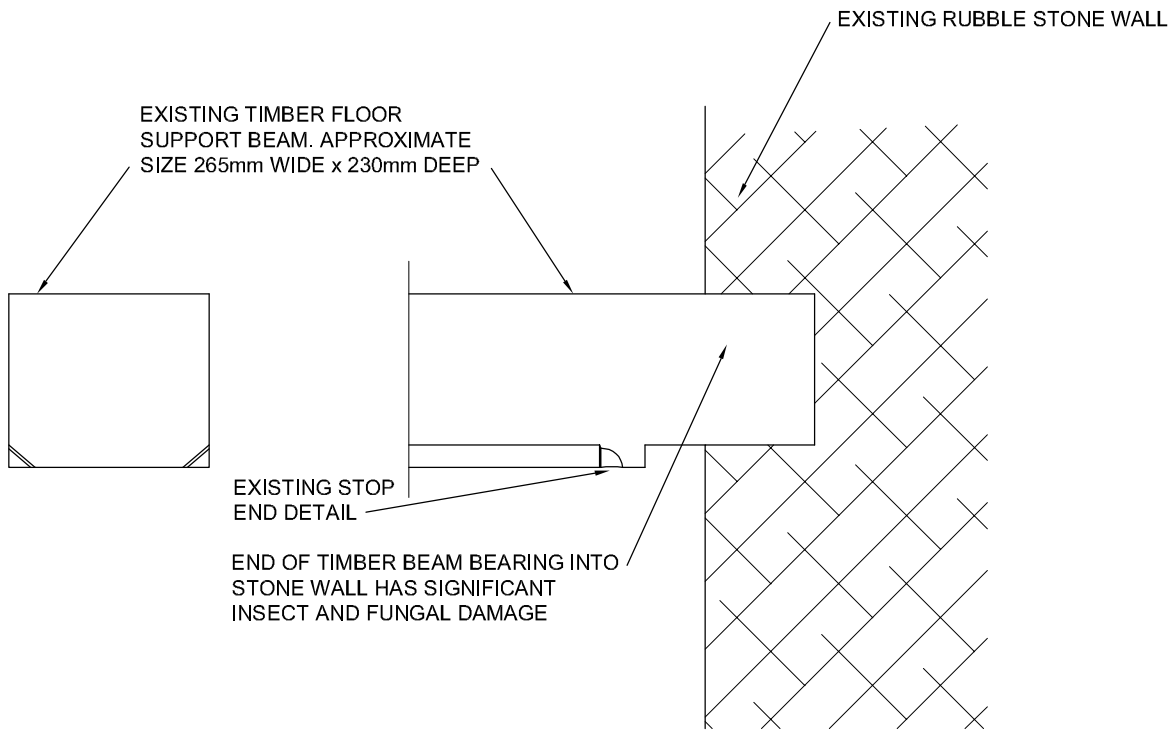

EXISTING BEAM DETAIL

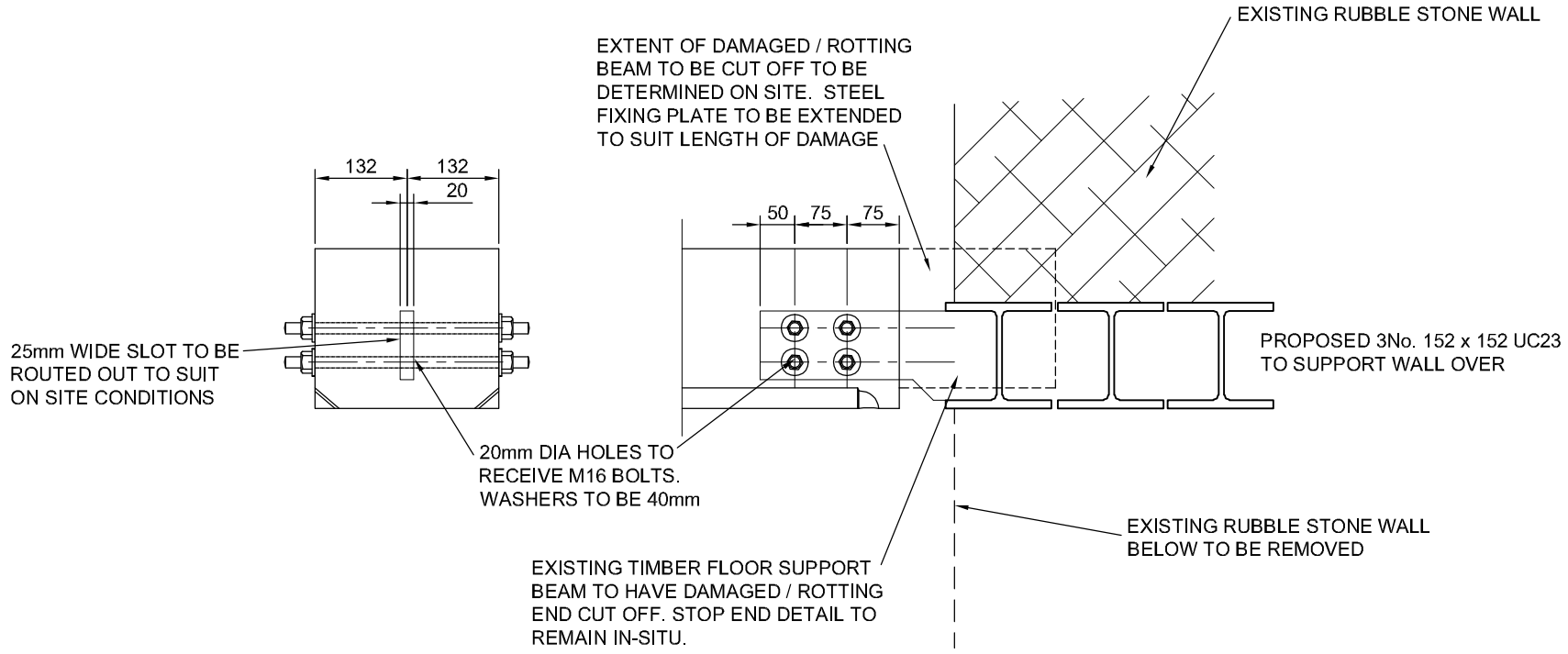

PROPOSED BEAM DETAIL

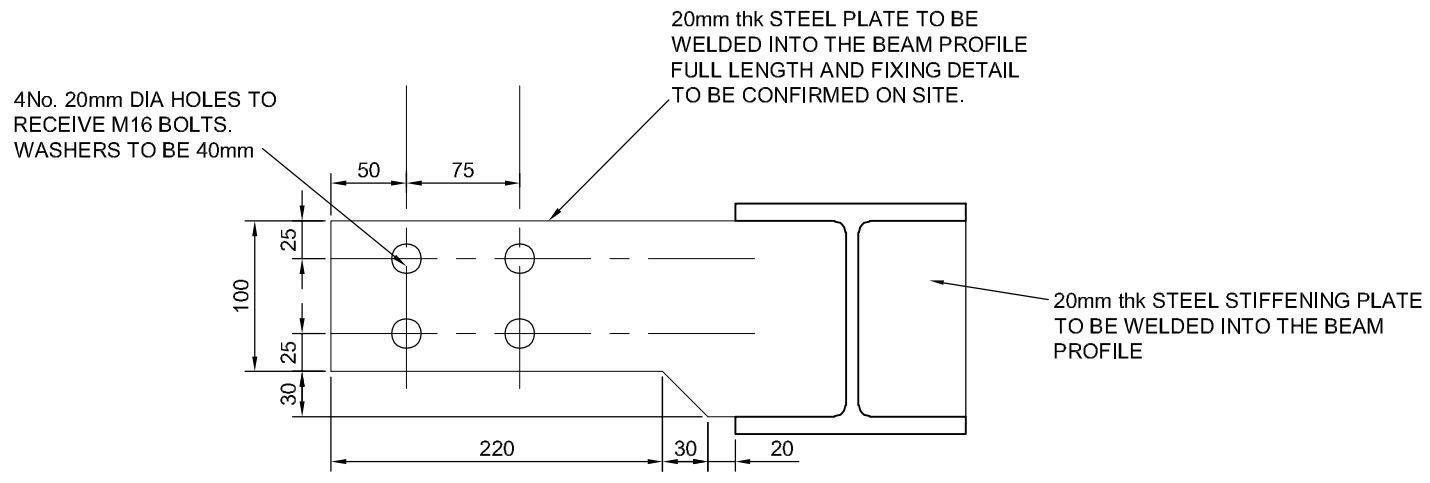

PROPOSED FIXING PLATE DETAIL

Client/ Project:
Mr and Mrs Bennett
Showell Farm, Showell

Drawing Title:
EXISTING AND PROPOSED TIMBER BEAM DETAILS

Project Ref:	Dwg. No.	Revision:	Date:	Checked:	Scale:	Dwg.Size.
1556	200	00	June 2024	rbr	1:10; 5	A3

RYMER DESIGN & DETAILING
4 Moor Park, Neston, Corsham, Wiltshire SN13 9YJ
Tel: 07932613108 E-Mail: richard@rymerdesign.co.uk