Proposed Stable at The Dean, Castle Street, Aldbourne, Marlborough, Wiltshire

Proposed Front and Rear Elevations and Floor Plan

Dwg No: R23-001

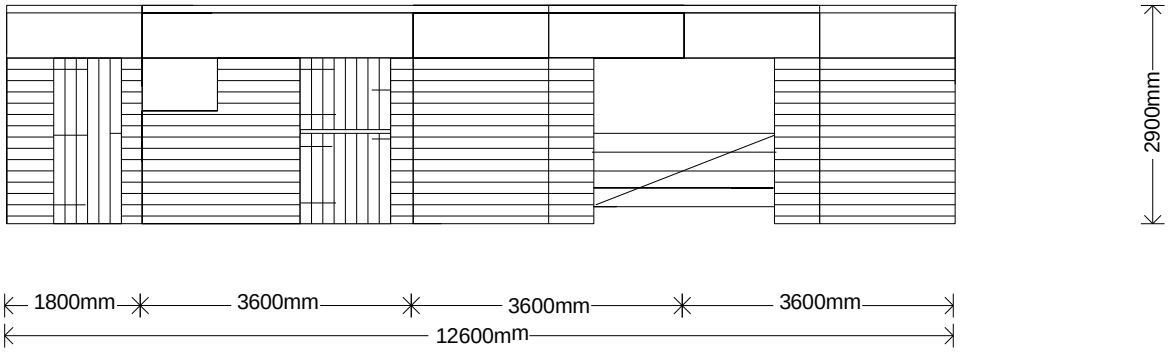

PROPOSED FRONT ELEVATION

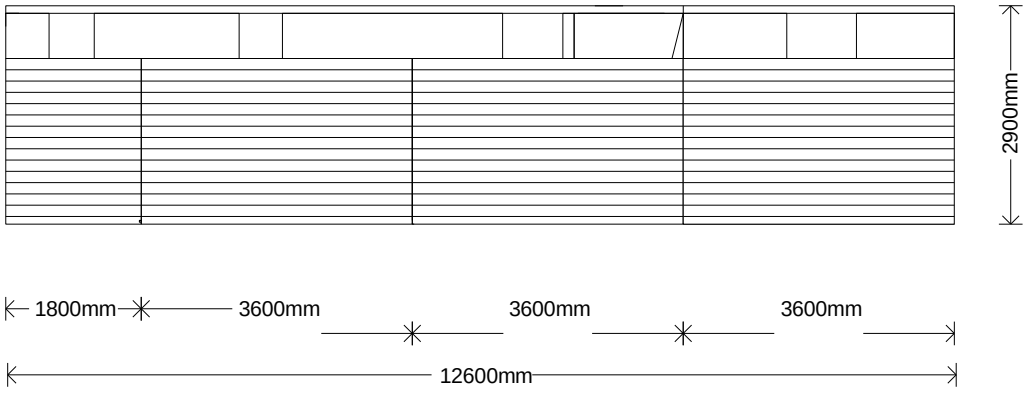

PROPOSED REAR ELEVATION

SCALE 1:100@ A4

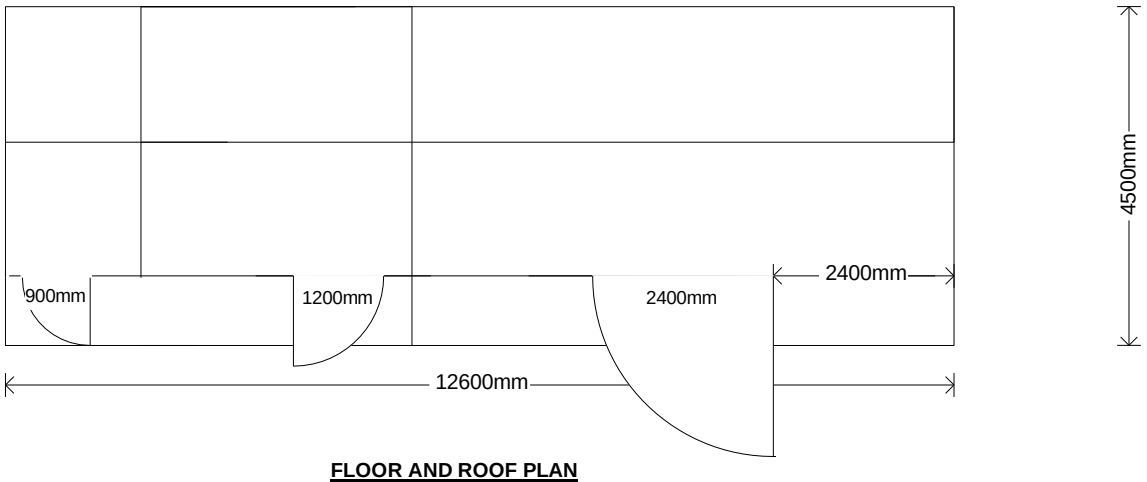

FLOOR AND ROOF PLAN

