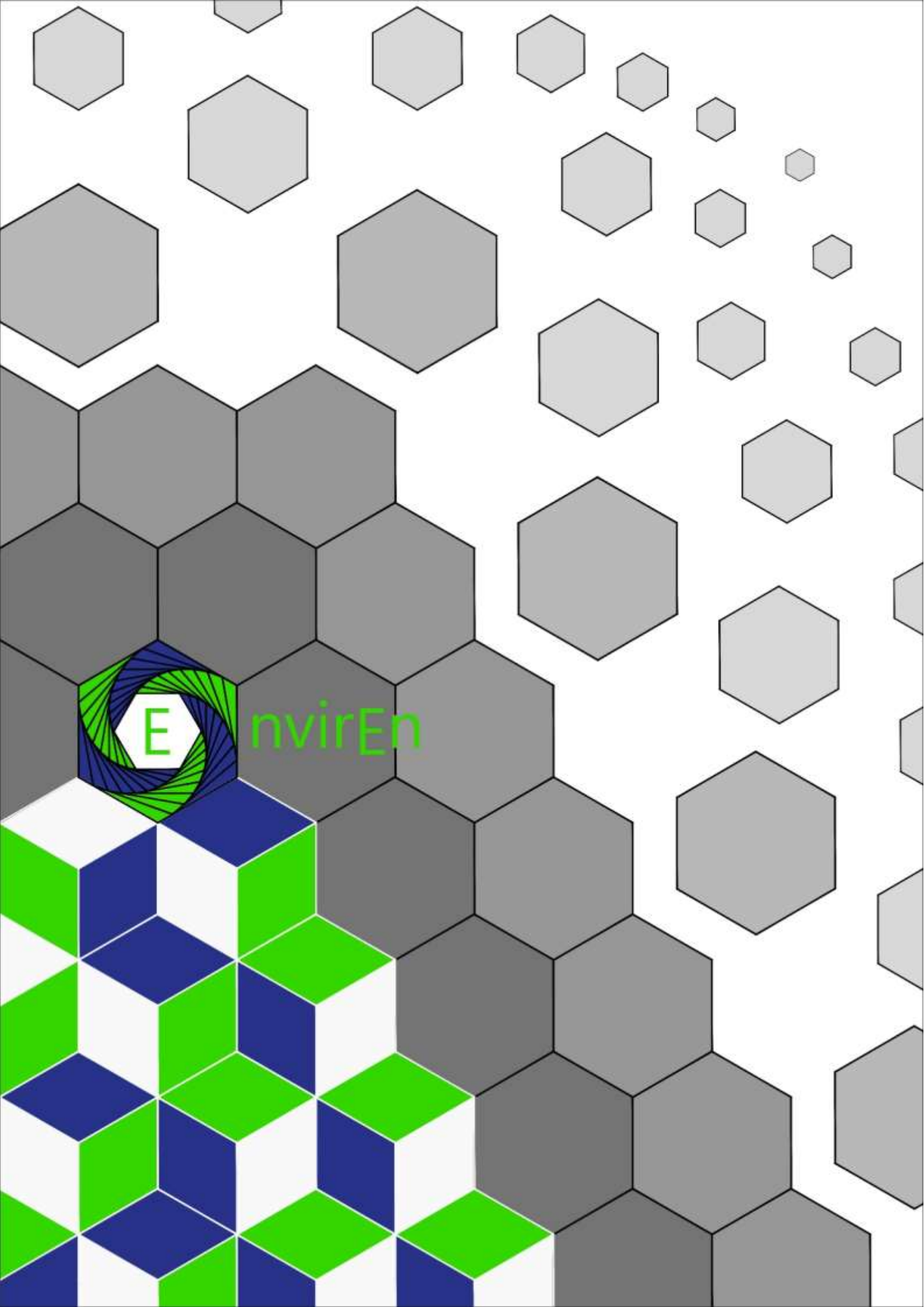
EnvirEn

Nutrient Neutrality Assessment and Mitigation Strategy (NNAMS)

Warminster Police Station, Warminster

B. Townsend BEng

20 May 2024

Document Ref: 2400172-NNAMS

Document Control

Produced by: B. Townsend BEng
Reviewed by: Z. Simmonds BSc (Hons)
Tel: 01275 560427
Email: technical@enviren.co.uk

Job Name: Warminster Police Station, Warminster

Report Title: Nutrient Neutrality Assessment and Mitigation Strategy (NNAMS)

Status: First Issue

Date: 20 May 2024

DOCUMENT PRODUCTION RECORD

AUTHOR:	B Townsend BEng
APPROVED BY:	Z Simmonds BSc (Hons)
ISSUED TO:	Adrian Smith
REPORT REFENCE:	2400172-NNAMS
DOCUMENT STATUS:	First Issue

DOCUMENT REVISION RECORD

Issue	Date	Revision Details
1.1	20/05/2024	First Issue

Confidentiality and Reproduction Restrictions

This report has been prepared by Enviren Ltd solely for use as part of the planning application associated with the construction of twenty one flats at Warminster Police Station, Warminster (Grid reference ST 87640 45174). This report is not issued to and cannot be relied upon by any other business, person or entity for any other grounds without the prior permission of Enviren Ltd. Enviren Ltd will not accept liability or responsibility for the use of this report or its findings (permitted or not) except for the aforementioned project, being the reason it was initially drafted and compiled. In the production of this report, Enviren Ltd relied upon information obtained and provided by others. The accuracy and completeness of this information cannot be guaranteed by Enviren Ltd; however all reasonable measures have been implemented to ensure that the data/information is accurate and that the observations made regarding the information are precise. This being said, Enviren Ltd cannot be made liable for any omissions or errors or for any losses/consequential losses following decisions made based on this report's findings.

Executive Summary

This report has been compiled for the support of the construction of twenty one flats at Warminster Police Station, Warminster (Grid reference ST 87640 45174.) The application is for the construction of the dwellings along with associated drives, gardens and infrastructure.

This report demonstrates that the development will achieve Nutrient Neutrality through directing surface water from the existing hardstanding out of the foul sewer and into soakaways and filter drains serving the proposed dwellings, additionally the applicant will install greywater recycling systems within the proposed flats. The proposals would result in an increase in nutrient loads from foul and surface water discharge if onsite controls were not to be implemented.

Contents

Document Control 2
Confidentiality and Reproduction Restrictions 3
Executive Summary 3
1. Introduction 5
2. Background Information 5
Site Location 5
Figure 2.1 – Site Location 5
Figure 2.2 – Hydrological Catchment Plan 6
Brief Site Hydrology 6
Site Description 6
Figure 2.3 – Aerial Reconnaissance Photography 7
Regional Background and Underlying Science 7
3. Development Proposals 7
Table 3.1 – Greywater Demand and Yield 8
4. Nutrient Budget Calculator – Observations and Results 9
Proposed Volumetric Reductions as a Result of Removing Surface Water Runoff from the Combined Sewer System 9
Table 4.1 – Water Generated vs Water Saved 10
Table 4.2 – Final Comparison of Volume of Water Generated 10
5. Conclusion 11
Table 5.1 – Pre and Post Nutrient Neutrality Assessment Risk Assessment 11
Appendix A Development Nutrient Calculator Direct Output 12
Appendix B Wessex Water Mapping 13
Appendix C Proposed Site Plan 14
Appendix D Drainage Plan 15
Appendix E Infiltration Risk Scoring 16
Appendix F Hydroloop H300 Product Data 17
Appendix G Regional Background and Context 18
Figure G.1 – Protected sites in the River Avon catchment. 18
Figure G.2 – Species of River Avon SAC. 19
Appendix H Nutrient Neutrality Underlying Science 20
Figure H.1 – Breakdown of Phosphorus Arisings from Domestic Sources 20
Figure H.2 – Phosphate Source Apportionment. 21

1. Introduction

1.1. This report has been prepared to support a planning application for the construction of twenty one flats at Warminster Police Station, Warminster. The report demonstrates that by removing surface water from the foul water sewer, through the installation of soakaways and filter drains, alongside installation of greywater recycling systems, the development will achieve Nutrient Neutrality. The site itself is 0.232Ha (2320m^2) and previously constituted commercial urban land area consisting of buildings, garages and parking area being part of Warminster Police Station. The creation of the flats would result in an increase in nutrients discharging into the surrounding water network due to foul water discharge from the proposed properties if onsite controls were not to be implemented (see **Appendix A**)
(Note: although being separate entities phosphorus and phosphates have been used interchangeably throughout this report and to suit the specific usage in background information and reports)

2. Background Information

Site Location

2.1. The site is located in central Warminster to south of Warminster train station. The site is located close to local amenities/landmarks such as the train station to the north and a supermarket to the east. The exact location can be found in **Figure 2.1**:



Figure 2.1 – Site Location

2.2. The proposed development sits within the hydrological catchment of the River Avon SAC, as indicated in **Figure 2.2**.



Figure 2.2 – Hydrological Catchment Plan

Brief Site Hydrology

2.3. Overland flows from the development are transported to the north east and then into the combined sewer in Station Road. The combined flows are transported to the Warminster WRC which subsequently discharges to the River Wylye. The River Wylye flows south and discharges into the River Nadder at Wilton. The River Nadder flows south before discharging into the River Avon in Salisbury. The River Avon flows south and discharges into the Christchurch Harbour.

Site Description

2.4. The proposed development is roughly 0.232 hectares in size when considering supplied site information. The site currently consists of buildings, hardstanding and grassed areas as displayed on the mapping in **Figure 2.3**.



Figure 2.3 – Aerial Reconnaissance Photography

Regional Background and Underlying Science

2.5. The regional background and context for nutrient neutrality within the River Avon SAC can be found in **Appendix G**. The underlying science that underpins the requirement to achieve nutrient neutrality is presented in **Appendix H**.

3. Development Proposals

3.1. The development proposals consist of the construction of twenty one flats, alongside associated gardens, drives and ancillaries. Currently surface water from the development site is drained to the combined/foul water network that passes along Station Road (see **Appendix B**).

3.2. To mitigate the nutrient arisings from the development the surface water shall be rerouted out of the foul sewer network, providing a significant volumetric reduction in water generated. As per Natural England guidance and the conclusions of other Royal Haskoning DHV[1] reports once water enters the foul sewer network it mixes with sewage from the surrounding catchment, when this reaches the WwTW it is discharged at a permitted concentration in mg/l, therefore by removing this surface water runoff from the foul sewer network the development shall achieve a significant reduction in nutrients discharged. This is the same methodology that allows water reduction measures to be used and why Package Treatment Plants (PTPs) cannot be connected to the sewer network to reduce nutrient loads.

3.3. A design infiltration rate of $4.2x10^{-5}$m/s has been calculated based on onsite percolation testing (see report ref: J-2865-Rev.02). Such an infiltration rate is adequate to enable the discharge of surface water to ground through permeable paving and to allow roof water from the site to be infiltrated to ground through soakaways. The development should be encased in gravel traps to ensure that overland flows do not exit the site. The provisions of

[1] Royal Haskoning DHV – Somerset Levels and Moors Phosphate Mitigation Solutions (Report reference: PC2250-RHD-ZZ-XX-RP-Z-0001)

this section should be conveyed to the appropriate engineer completing the drainage strategy for the development to be incorporated for submission.

3.4. As the surface water shall discharge to ground the post development phosphorus loads need not be considered, this is as per the methodology outline in CIRIA C808[2]:

"Where stormwater runoff from residential developments can be infiltrated to ground, and where soil conditions allow that infiltration to occur without risk of groundwater pollution, then it should be maximised across the development and used as the first step in phosphorus pollution control. ***For all flows that are effectively infiltrated, and where groundwater protection is provided by the soil, the phosphorus in that runoff is considered to be captured and removed from the water environment***"

3.5. The volumetric reduction in water from surface water runoff can be calculated by following the principles of the Wallingford Procedure[3] and the Modified Rational Method. Detailed calculations for the reduction achieved can be found in **Section 4**.

3.6. As the Warminster WRC currently benefits from a permitted discharge concentration the reduction can be immediately used to offset the development. Discharge of surface water to ground should not be seen as mitigation as development should follow the hierarchy in Approved Document H[4], which states that development should discharge to the following receptors in order of preference:

1) An adequate soakaway or some other adequate infiltration system; or, where that is not reasonably practicable,
2) A watercourse; or, where that is not reasonably practicable,
3) A sewer.

As can be seen the development shall promote the discharge of surface water up the hierarchy established in the Building Regulations and therefore the proposals shall not constitute mitigation, it is merely construction best practice that all new development should follow.

Greywater recycling system

3.7. Additionally, a greywater recycling system will be introduced into the proposed flats, to reduce the wastewater output. The greywater yield and demand are presented in **Table 3.1**.

Table 3.1 – Greywater Demand and Yield

Greywater Demand		
Component	**Greywater Demand (litres per person per day)**	**Greywater Demand (litres per flat per day [based on an occupancy of 1.75 persons per house])**
WC	13.54	23.70
Washing Machine	17.16	30.03
Irrigation	5.00	8.75
Total	35.7	62.48

[2] CIRIA C808 – Using SuDS to reduce phosphorus in surface water runoff
[3] The Wallingford Procedure – Design and analysis of urban storm drainage – Volume 4 The Modified Rational Method
[4] The Building Regulations 2010 – Approved Document H – Drainage and waste disposal

Greywater Yield		
Component	**Greywater Yield (litres per person per day)**	**Greywater Yield (litres per flat per day [based on an occupancy of 1.75 persons per house])**
Showers, Bath and Hand Basins	63.14	110.50

3.8. A can be seen in **Table 3.1**, the greywater yield far exceeds the greywater demand. The reduced water demand per person shall therefore be 85l/p/d (84.3l/p/d rounded up).

3.9. The use of greywater recycling systems is considered industry best practice, as per Approved Document G, and therefore has not been included as mitigation. This is the same methodology justifying why the 110l/p/d optional planning requirement is not considered as mitigation. The greywater recycling to be used is a Hydraloop H300 (see **Appendix G**).

4. Nutrient Budget Calculator – Observations and Results

4.1. The direct print of the River Avon SAC Budget Calculator for the development is given in **Appendix A**. This section shall outline the observations made on the site, including proposed nutrient loads, previous and proposed land uses and volume of water generated as provided in the River Avon SAC Budget Calculator.

Proposed Volumetric Reductions as a Result of Removing Surface Water Runoff from the Combined Sewer System

4.2. As discussed in **Section 3**, by removing surface water discharge from a combined sewer network significant reductions in phosphorus discharge can be achieved. The volumetric reduction in water from surface water runoff can be calculated by following the principles of the Wallingford Procedure[5] and the Modified Rational Method, this simply means finding the average annual rainfall at the development site, multiplying this by the area of the site and applying a suitable annual volumetric runoff coefficient of 0.795 (being the average of the summer and winter volumetric runoff coefficients, being 0.75 and 0.84 respectively). The volumetric runoff coefficient looks at antecedent wetness conditions and makes an allowance for depressions, infiltration and other micro-storage mechanisms which would reduce the rate of runoff.

4.3. The calculations take an average annual rainfall value (SAAR value) of 913mm/year, as advised by the Source Control package of MicroDrainage[6]. The calculation for the amount of runoff generated is:

Criteria

Total Impermeable Area: 1718m^2
Average Runoff Coefficient: 0.795 (Average: (0.85 + 0.75)/2)
Total Annual Rainfall: 0.913m or 913mm

[5] The Wallingford Procedure – Design and analysis of urban storm drainage – Volume 4 The Modified Rational Method
[6] Innovyze – MicroDrainage – Source Control

Total Annual Volumetric Output

$$V_{Total} = Total\ Area\ \times Average\ Runoff\ Coefficient \times Total\ Annual\ Rainfall$$

$$V_{Total} = 1718\ \times 0.795\ \times 0.913$$

$$V_{Total} = 1247m^3$$

Therefore, the total average daily litres generated are:

$$L_{Daily} = \frac{V_{Total} \times 1000}{365}$$

$$\boldsymbol{L_{Daily} = \ 3416\ litres}$$

4.4. The difference between proposed volumetric loads from the dwellings and proposed volumetric savings from removing surface water from the combined sewer is presented in **Table 4.1**:

Table 4.1 – Water Generated vs Water Saved	
Unmitigated Wastewater Generated	3124 litres
Water Saved	3416 litres
Total	-292 litres

Table 4.2 – Final Comparison of Volume of Water Generated	
Prior to Mitigation	
Component	**Value**
Wastewater Generated by Development (Litres)	+3124 litres
Phosphorus Load from Wastewater Generated by Development (Pre-2030)	+0.51kg/year
Litres saved from Removing Surface Water Runoff from the Combined Sewer System	-3416 litres
Phosphorus Reduction from Removing Surface Water Runoff from the Combined Sewer System (Pre-2030)	-0.56kg/year
Pre-Mitigation Nutrient Budget	-0.05kg/year

5. Conclusion

5.1. As can be seen in this report, the nutrient arisings associated with the development have been extensively considered. The applicant will divert the surface water from the existing hardstanding/buildings out of the foul sewer system and thus provide the required nutrient reduction, as well as this the applicant shall install soakaways to take runoff from the proposed flats and gravel traps onsite to intercept overland flows. Additionally, the applicant will install greywater recycling systems in the proposed flats. The applicant shall achieve Nutrient Neutrality through the proposals and therefore nutrient arisings should not prevent planning permission being granted.

Table 5.1 – Pre and Post Nutrient Neutrality Assessment Risk Assessment

Pre NNAMS Risk				
Risk	**Description**	**Probability**	**Severity**	**Action to minimise risk**
Pollution of downstream water bodies.	Nutrients discharged from the development causing eutrophication downstream.	Looking at the hydraulic/ hydrological pathways, there is a medium likelihood of nutrient contamination.	Arisings from the development will be low/moderate.	Provide mitigation measures or control measures either through site controls or nutrient offsetting.
Post NNAMS Risk				
Risk	**Description**	**Probability**	**Severity**	**Action to minimise risk**
Pollution of downstream water bodies.	Nutrients discharged from the development causing eutrophication downstream.	Looking at the hydraulic/ hydrological pathways, there is a medium likelihood of nutrient contamination.	Arisings from the development will be offset through removing surface water from the combined sewer network and installing greywater recycling systems within the proposed flats.	No further action required.
High		Medium		Low

Appendix A Development Nutrient Calculator Direct Output

(Press Alt + Left Arrow to return if using Hyperlinks)

Nutrients from wastewater

This sheet contains 2 tables. The tables are separated by a heading, which describes the following table.
Note: You will need to fill in cells B5 to B9 in the first table 'Water infrastructure information'. Cells B10 is automatically calculated and will state '0.00' unless the user inputs have been entered. Cells A11 to A12 and B11 to B12 are automatically generated and will state 'Not applicable' depending on the inputs to cells B5 and B9. You may need to fill in cell C10 depending on the information you entered in cell B9. Cells C5 to C9 and cells C11 to C12 are intentionally blank cells.
You do not need to fill in any cells in the second table 'Final calculation of nutrient load from wastewater'. Cells B16 to B18 are automatically calculated and will state '0.00' unless the user inputs have been entered to the first table 'Water infrastructure information'. Cells A19 to A22, cells B20 and B22 are automatically generated and will state 'Not applicable' depending on the user inputs to the first table 'Water infrastructure information'. Cell B15, cell B19 and cell B21 are intentionally blank cells.
How to fill in the table 'Water infrastructure information'
Cell B5: Enter the date of first occupancy.
Cell B6: Enter the average occupancy rate of the development. The default rate is 2.4, this should not be edited without sufficient evidence.
Cell B7: Enter the water usage. This value should be kept at 120 unless other efficiency measures are used.
Cell B8: Enter the total number of dwellings or units that will be within the development site as of the project completion date.
Cell B9: Choose the receiving wastewater treatment works (WwTW) from the dropdown list.
If you select 'Package Treatment Plant user defined' or 'Septic Tank user defined', you must enter their certified value of total phosphorus (TP) in cell C10. Otherwise the default values will be used in the calculation of the nutrient load associated with wastewater.
Nutrient permits may be changing for the WwTW you select, from 01/01/2025, or 01/04/2030. If the date of first occupancy is in-between changing permit dates, multiple permit limits may be automatically generated in cells B10 to B12. If applicable, up to 3 values for the nutrient loading associated with wastewater will be presented in cell B18, B20 or B22.

Water infrastructure information

Description of required information	Data entry column - user inputs required	Additional data entry column - user inputs may be required
Date of first occupancy (dd/mm/yyyy):	20/05/2025	
Average occupancy rate (people/dwelling or people/unit):	1.75	
Water usage (litres/person/day):	85	
Development proposal (dwellings/units):	21	
Wastewater treatment works:	Warminster WwTW	
Current wastewater treatment works P permit (mg TP/litre):	**0.50**	

Not applicable	**Not applicable**	
Post 2030 WwTW P permit (mg TP/litre):	**0.25**	

Final calculation of nutrient load from wastewater

Description of values generated	**Values generated**
Post-2030 wastewater nutrient Loading	
Additional population (people):	**36.75**
Wastewater by development (litres/day):	**3123.75**
Annual wastewater TP load (kg TP/yr):	**0.26**
Pre-2030 wastewater nutrient loading	
Annual wastewater TP load (kg TP/yr):	**0.51**
Not applicable	
Not applicable	**Not applicable**

Nutrients from current land use

This sheet contains 2 tables. The tables are separated by a heading, which describes the following table.
Note: You will need to fill in cells B5 to B8 in the first table 'Current land use information'. You will need to fill in cells A11 to A27, and B11 to B27 in the second table 'Current land uses'. Cells B28, C11 to C28 are automatically calculated and will state '0.00' unless the user inputs have been entered. Cells D11 to D27 are automatically generated and will state 'Not applicable' depending on automatically generated data in cells C11 to C27. Row 28 is a Total Row. The Total Row states 'Totals:' in cell A28 and automatically calculates the total sum of cells B11 to B27 in cell B28 and C11 to C27 in cell C28. Cell D28 is intentionally blank.
How to fill in the table 'Current land use information'
Cell B5: Choose the operational catchment the site is located within from the dropdown list.
Cell B6: Choose the soil drainage type associated with the predominant soil type within the development site from the dropdown list.
Cell B7: Choose the annual average rainfall the development will receive from the dropdown list. If the rainfall volume is not on the list, select the nearest value.
Cell B8: Choose whether the development is in a nitrate vulnerable zone (NVZ) from the dropdown list.
How to fill in the table 'Current land uses'
Cell A11-A27: Choose the existing (pre-development) land use type(s) from the dropdown list.
Cells B11-B27: Enter the area in hectares of each land use type.
The nutrient load from current land uses is shown in cells C11-C27 for total phosphorus (TP).
The total nutrient load from current land uses is shown in cell C28 for TP.

Current land use information

Description of required information	Data entry column - user inputs required
Operational catchment:	Avon Hampshire
Soil drainage type:	Freely draining
Annual average rainfall (mm):	850.1 - 900
Within nitrate vulnerable zone (NVZ):	Yes

Current land uses

Existing land use type(s) - user inputs required	Area (ha) - user inputs required	Annual phosphorus export (kg TP/yr)
Commercial/industrial urban land	0.44	**0.56**
		0.00
		0.00
		0.00
		0.00
		0.00
		0.00
		0.00
		0.00
		0.00
		0.00
		0.00
		0.00

		0.00
		0.00
Totals:	**0.44**	**0.56**

Nutrients from future land use

This sheet contains one table.

Note: You will need to fill in cells A5 to A21 and B5 to B21. Cells B22 and C5 to C22 are automatically generated calculations and will state '0.00' unless the user inputs have been entered. Row 22 is a Total Row. The Total Row states 'Totals:' in cell A22 and automatically calculates the total sum of cells B5 to B21 in cell B22 and C5 to C21 in cell C22.

How to fill in the table 'Future land uses'

Cells A5-A21: Choose the future (post-development) land use type(s) of landcover present on the new site from the dropdown list
Cells B5-B21: Enter the area in hectares of each land use type.

The nutrient load from future land uses is shown in cells C5 to C21 for total phosphorus (TP).

The total nutrient load from future land uses is shown in cell C22 for TP.

Future land uses

New land use type(s) - user inputs required	Area (ha) - user inputs required	Annual phosphorus export (kg TP/yr)
Residential urban land	0.23	**0.41**
		0.00
		0.00
		0.00
		0.00
		0.00
		0.00
		0.00

		0.00
		0.00
		0.00
		0.00
		0.00
		0.00
		0.00
		0.00
		0.00
Totals:	0.23	0.41

Nutrients from future land use after sustainable urban drainage system (SuDS) treatment

This sheet contains one table.
Note: You will need to fill in cells A5 to A29, cells B5 to B29, cells C5 to C29, cells E5 to E29 and cells F5 to F29 if you are including SuDS to remove nutrients from the surface runoff. Cells B30, D5 to D30 and cells G5 to G30 are automatically calculated and will state '0.00' unless the user inputs have been entered. Cells H5 to H29 are automatically generated and will state 'Not applicable' unless the total area of the landcover entered is larger than the total area of the landcover entered into the worksheet 'Nutrients_from_future_land_use'. Row 30 is a Total Row. The Total Row states 'Totals:' in cell A30 and automatically calculates the total sum of cells B5 to B29 in cell B30, cells D5 to D29 in cell D30 and cells G5 to G29 in cell G30. Cell C30, cell E30, cell F30 and cell H30 are intentionally blank.
How to fill in the table 'SuDS information'
Cells A5 to A29: Choose the future (post-development) land use type(s) of landcover present on the new site within the SuDS catchment area from the dropdown list. Only landcovers entered into the worksheet titled 'Nutrients_from_future_land_use' can be entered.
Cells B5 to B29: Enter the area in hectares of each new land use type within the SuDS catchment area.
Cells C5 to C29: Enter the percentage of the flow entering the SuDS feature. If all flow is being diverted to the SuDS feature then this value should be set to 100%.
The annual total phosphorus (TP) loads associated with the landcovers in the SuDS catchment area are automatically calculated in cells D5 to D29.
Cells E5 to E29: Enter the name of the SuDS features used to intercept surface flows can be entered in. Any text can be entered into these cells.
Cells F5 to F29: Enter the nutrient removal rates associated with the SuDS features for TP.
Values for column F must be identified by the user and must be specific to the SuDS features being implemented.
The annual TP load removed by the SuDS features are automatically calculated in cells G5 to G29. These values are subtracted from the nutrient budget.
You do not need to fill in column H 'Notes on data'. It will state "Not applicable" unless the total area of each landcover within the SuDS catchment area exceeds the area of the landcovers entered into the worksheet titled 'Nutrients_from_future_land_use'.
The total nutrient load removed through the SuDS features is shown in cell G30 for TP.

SuDS information

New land use type(s) within SuDS catchment area - user inputs required	SuDS catchment area (ha) - user inputs required	Percentage of flow entering the SuDS (%) - user inputs required
Residential urban land	0.23	100.00

Totals:	**0.23**	

Annual phosphorus inputs to SuDS feature(s) (kg T/yr)	Name of SuDS feature(s) - user inputs required	TP removal rate for features - user specified (%) - user inputs required	Annual phosphorus load removed by SuDS (kg TP/yr)
0.41	Permeable Paving/Soakaways	100.00	**0.41**
0.00			**0.00**

0.00			0.00
0.00			0.00
0.00			0.00
0.41			0.41

Final nutrient budgets

This worksheet contains one table. This table is automatically populated using the outputs from the previous worksheets.

Note: You do not need to fill in any cells in the table.
Cells B5 to B8 and cells B10 are automatically calculated and will state '0.00' unless the user inputs have been entered to all of the required worksheets.
Cells A11 to A14, cell B12 and cell B14 are automatically generated and will state 'Not applicable' depending on the user inputs to the worksheet 'Nutrients_from_wastewater'.
Cell B9, B11 and B13 are intentionally blank.

This table presents calculations that underpin the final annual nutrient budget for the development site. Up to 3 values for the nutrient budget may be presented in cells B10, B12 and B24 for total phosphorus (TP).

Total nutrient budget calculations

Description of values generated	Values generated
Wastewater TP load (kg TP/year):	**0.26**
Net land use TP change (kg TP/year):	**-0.56**
TP budget:	**-0.30**
TP budget + 20% buffer:	**-0.30**
Annual nutrient budget	
The total annual phosphorus load to mitigate is (kg TP/yr):	**0.00**
Pre-2030 nutrient budget	
The total annual phosphorus load to mitigate is (kg TP/yr):	**0.00**
Not applicable	
Not applicable	**Not applicable**

Appendix B Wessex Water Mapping

(Press Alt + Left Arrow to return if using Hyperlinks)

Wessex Water Network Map

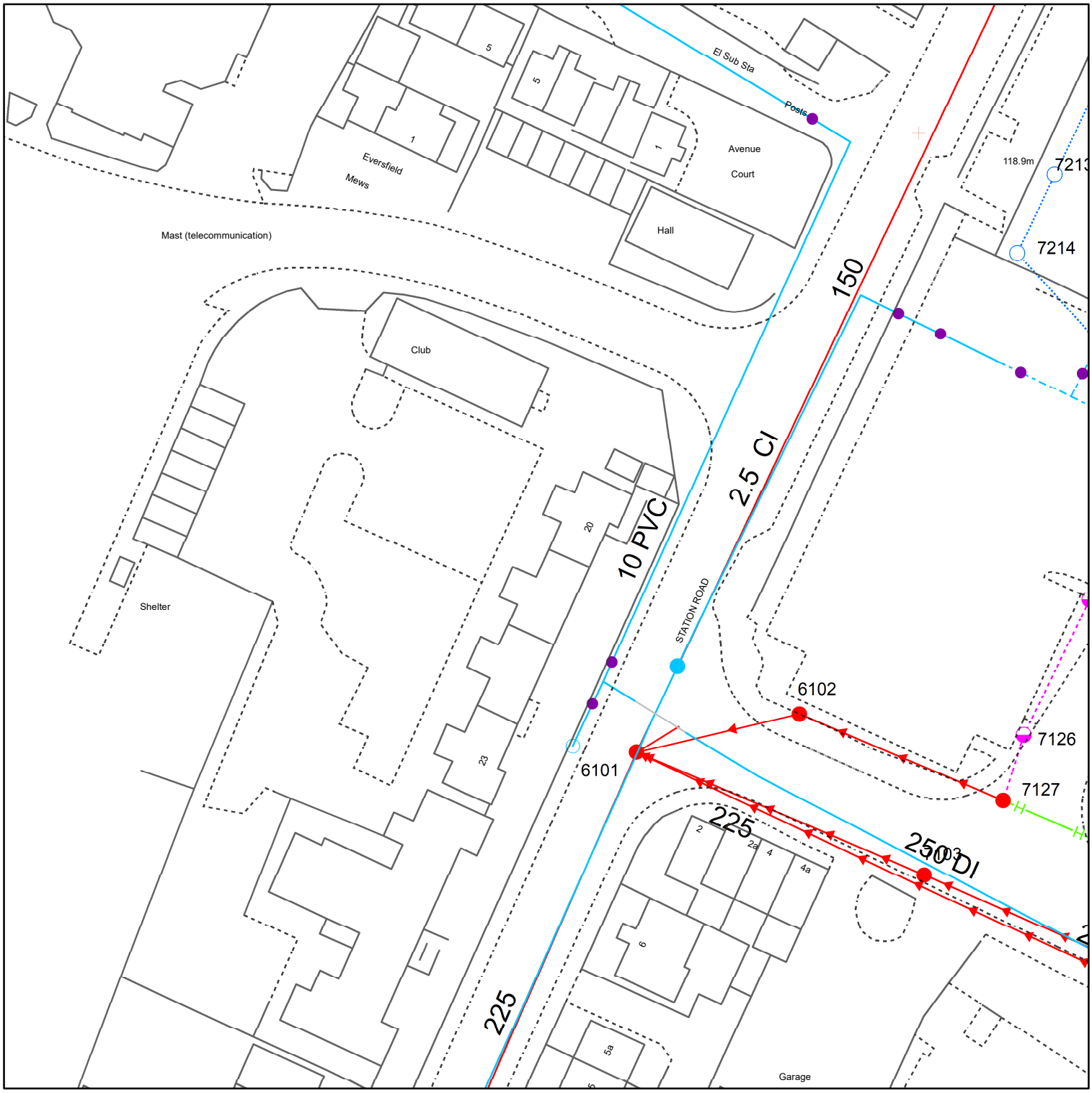

Reproduced from the Ordnance Survey map by permission on behalf of the Controller of Her Majesty's Stationery Office © Crown Copyright . Licence 100019539.

WATER MAINS
- Distribution
- Washout
- Raw Water
- Abandoned
- Private

FITTINGS
- Hydrant
- Other

SEWERS

	STRATEGIC	PUBLIC	PRIVATE	SECTION 104
Foul				
Surface				
Combined				
Abandoned				

Colours generally indicate the use of the sewer/drain (i.e Red - Foul, Dark Blue - Surface, Magenta - Combined/Dual Use, Light Green - Highway Drain, Mid Green - Overflow).
Some styles of line and symbol are shown on the key in sample/typical colours.

STRUCTURES
- Manhole - Foul
- Manhole - Surface
- Manhole - Combined
- Inlet
- Outfall
- Lamphole
- Bifurcation - Foul
- Bifurcation - Surface
- Bifurcation - Combined
- Combined Sewage Overflow
- Pumping Station - Surface
- Pumping Stn - Foul/Combined
- Gully
- Vent Column
- Rodding Eye
- Catchpit
- Flushing Chamber
- Soakaway
- Non Return Valve
- Air Valve
- Hatch Box
- X Washout

OTHER WESSEX PIPES
- Rising Mains
- Standby Rising Mains
- EDM Effluent Disposal
- Overflow
- S Syphon

NON-WESSEX / UNKNOWN
- Private Rising Mains
- CW Culverted Watercourse
- H Highway Drain
- ? Use Unknown
- SU Status Unknown

OTHER STRUCTURES
- Attenuation Tank
- Storage Tank
- Chamber
- Tunnel
- Interceptor

Wessex Water
YTL GROUP

Information in this map is provided for identification purposes only. No warranty as to accuracy is given or implied. The precise route of pipe work may not exactly match that shown. Wessex Water does not accept liability for inaccuracies. Sewers and lateral drains adopted by Wessex Water under the Water Industry (Schemes for Adoption of Private Sewers) Regulations 2011 are to be plotted over time and may not yet be shown. In carrying out any works, you accept liability for the cost of any repairs to Wessex Water apparatus damaged as a result of your works. You are advised to commence excavations using hand tools only. Mechanical digging equipment should not be used until pipe work has been precisely located. If you are considering any form of building works and pipe work is shown within the boundary of your property or a property to be purchased (or very close by) a surveyor should plot its exact position prior to commencing works or purchase. If you are proposing to build over or near Wessex Water's apparatus you should contact the Developer Services Team, tel: 01225 526333 or e-mail: developer.enquiries@wessexwater.co.uk to discuss your proposals. Details of assets within Wessex Water's land ownership are unavailable through this service.

Date: 16/05/2024
Centre: 387667, 145180
Scale: 1:625
(when printed at A4 size)

Appendix C Proposed Site Plan

(Press Alt + Left Arrow to return if using Hyperlinks)

Accommodation Schedule

Type/location	Apt. no	Floor	Beds	floor area m²
Apt/Block A	1	Ground	2	68
Apt/Block A	2	Ground	2	68
Apt/Block A	3	Ground	1	47
Apt/Block A	4	First	2+office	76
Apt/Block A	5	First	2	68
Apt/Block A	6	First	1	56
Apt/Block A	7	Second	2+office	76
Apt/Block A	8	Second	2	68
Apt/Block A	9	Third	1	55
Apt/Block B	1	Ground	2	68
Apt/Block B	2	Ground	2	68
Apt/Block B	3	First	2+office	76
Apt/Block B	4	First	2+office	88
Apt/Block B	5	Second	2+office	76
Apt/Block B	6	Second	1+office	54
Apt/Block B	7	Third	1	55
coach house Block C	1	First	1	50
coach house Block C	2	First	1	50
coach house Block C	3	First	1	50
Apt/Block D	1	Ground	2	64
Apt/Block D	2	First	2	90
Total	21			1371

Total Parking allocation spaces — 20+6 conversion

Legend

- Proposed Shrub/ornamental tree planting(scheme to be agreed)
- grass areas.
- permeable block paving finish (marshalls tegula priora blocks in grey or as agreed)
- permeable block paving finish (marshalls tegula priora blocks in traditional or as agreed)
- parking — permeable block paving to parking spaces with contrasting linear blocks as space demarcation, (marshalls tegula priora traditional with grey as demarcation) or as agreed
- refuge bin storage location
- cycle storage location
- buff colured paving slabs to form access paths
- permeable block paving finish (Marshalls tegula priora colour harvest or as agreed) to main entrances



Scales

1:200 Metric Scale Bar

0 2 4 6 8 10 12 14 16 18

Note:
All designs and information conveyed are the intellectual property of APEX PLANNING DESIGN. The unauthorised copying,usage or distribution of this drawing or the contents of; in part or in whole is forbidden without express permission. All dimensions to be checked on site and any discrepancy immediately reported to APEX PLANNING DESIGN.
©Copyright all rights reserved.APEX PLANNING DESIGN 2023.

Client

Gainsborough Group Construction Ltd

Job

Proposed new development of former police station at
22 Station Road,
Warminster,
Wiltshire.
BA12 9BR

Title

Proposed revised site layout

Scale

1:200@A1

Date

March 2024

Drawn

Stewart Maxwell BSc. (Hons)

Drg Number

APD-03-24-04 A

Revisions

A 15-05-24 Layout revised in accordance with planning comments.

APEX PLANNING DESIGN

Email: adrian@apexpd.co.uk

Appendix D Drainage Plan

(Press Alt + Left Arrow to return if using Hyperlinks)

KEY

- PROPOSED PRIVATE SURFACE WATER SEWER 150mmØ AT 1:150 UNLESS SHOWN OTHERWISE TAKING RUNOFF FROM ROADS AND PARKING
- PROPOSED PRIVATE SURFACE WATER SEWER 150mmØ AT 1:150 UNLESS SHOWN OTHERWISE TAKING RUNOFF FROM ROOF AREAS
- PROPOSED PRIVATE FOUL SEWER/DRAIN 150mmØ 1:150 MIN UNLESS SHOWN OTHERWISE
- EXISTING FOUL WATER DRAINAGE PUBLIC
- PROPOSED PRIVATE SOAKAWAY CONSTRUCTED USING MODULAR INFILTRATION UNITS
- PROPOSED PRIVATE SURFACE WATER POLYPROPYLENE INSPECTION CHAMBER (475Ø/450Ø P.P.I.C.)
- PROPOSED PRIVATE SURFACE WATER MINI ACCESS CHAMBER (MAC) 600mm MAX DEPTH
- PERCOLATION TEST LOCATION
- CP PROPOSED SURFACE WATER CATCHPIT CHAMBER (1200Ø P.C.C.)
- PROPOSED PRIVATE FOUL WATER POLYPROPYLENE INSPECTION CHAMBER (475Ø/450Ø P.P.I.C.)
- FLOOD ROUTING

CAUTION !
UNDERGROUND UTILITY SERVICES NOT SHOWN ON DRAWING

LINEAR DRAIN TO BE PROVIDED AT ACCESS THRESHOLD TO PREVENT LOCALISED RUNOFF ONTO PUBIC HIGHWAY

SA1
PROPOSED SOAKAWAY CONSTRUCTED FROM MODULAR INFILTRATION UNITS OF 95% VOID CONTENT- WAVIN AQUACELL CORE R OR EQUIVALENT
SIZE 12m (L) x 2.5m (W) x 1.2m (D)
TO DRAIN IMPERMEABLE AREA OF ROOF 458m2 AND SELF AREA 30m2 = 490m2
GL 117.70 (approx)
BASE 115.50 (approx)

SOAKAWAY 1

TRIAL PIT SA1 Q=9.18 m/h

ACCESS ROAD , PARKING SPACES AND TURNING HEAD TO BE CONSTRUCTED IN PERMEABLE MATERIALS WITH 300mm DEEP POROUS SUB BASE OF MIN 30% VOID CONTENT SUBJECT TO MINIMUM STRUCTURAL REQUIREMENTS. FINISHED SURFACE GRADIENTS TO BE 1 IN 60 MAX

SA2
PROPOSED SOAKAWAY CONSTRUCTED FROM MODULAR INFILTRATION UNITS OF 95% VOID CONTENT- WAVIN AQUACELL CORE R OR EQUIVALENT
SIZE 5m (L) x 2.5m (W) x 1.2m (D)
TO DRAIN IMPERMEABLE AREA OF ROOF 202m2 AND SELF AREA 12.5m2 = 220m2
GL 117.90 (approx)
BASE 115.70 (approx)

SA3
PROPOSED SOAKAWAY CONSTRUCTED FROM MODULAR INFILTRATION UNITS OF 95% VOID CONTENT- WAVIN AQUACELL CORE R OR EQUIVALENT
SIZE 3m (L) x 2.5m (W) x 1.2m (D)
TO DRAIN IMPERMEABLE AREA OF ROOF 93m2 AND SELF AREA 7.5m2 = 110m2
GL 117.70 (approx)
BASE 115.50 (approx)

TRIAL PIT SA3 Q=0.15m/h

PROPOSED FOUL DRAINAGE TO CONNECT INTO EXISTING CHAMBER
ASSUMED IL 116.90m AOD OR LOWER

ASSUMED ROUTE OF EXISTING FW PIPEWORK

PROPOSED FOUL DRAINAGE CONNECTION POINT FOR BLOCKS A AND B INTO NEW MANHOLE CONSTRUCTED ON EXISTING WW FOUL SEWER ASSUMED IL 116.00m AOD OR LOWER FOR GRAVITY CONNECTION
S106 APPLICATION REQUIRED

PROPOSED FOUL DRAINAGE CONNECTION POINT FOR COACH HOUSE INTO EXISTING WW FOUL SEWER.
ASSUMED IL 116.40m AOD OR LOWER.
S106 APPLICATION REQUIRED

STATION ROAD

Garage

PLAN SHOWING PRELIMINARY FOUL AND SURFACE WATER DRAINAGE PROPOSALS
(Scale 1:200)

Copyright - This drawing and any ancillary drawings or data are copyright of EDS and may not be used, copied or amended for any purpose whatsoever without written approval.

NOTES

1. This drawing is copyright. Refer to details above.
2. This drawing is only to be used for the purposes described in the status box below.
   Work to figured dimensions only, do not scale for construction purposes.
3. This drawing is to be read in conjunction with all other drawings, details and specifications pertaining to the work described. It should only be used for the purpose marked in the status box below, and shall not be used for construction unless clearly marked CONSTRUCTION.
4. Materials and workmanship shall comply to the appropriate British Standards and Codes of Practice unless otherwise stated.
5. The activities required to construct the work, shown on drawings clearly marked CONSTRUCTION, may be subject to the provisions of the Construction (Design & Management) Regulations 2015. The Contractor and Client must ensure that they are adequately conversant with these regulations and that the appropriate procedures required under the regulations are observed at all times.
6. The contractor is responsible for locating services prior to excavation. Any services shown on the drawing should be considered 'indicative' only. Where no services are shown on the drawing it does not necessarily mean there are no services present, only that a services search has not been undertaken. Where in doubt refer to HSE booklet "avoiding danger from underground services"
7. Design Risk Assessment

   A risk assessment relating to potential hazards associated with the works described within this drawing, in so far as they have been designed by EDS Ltd, has been undertaken. Risks identified have been eliminated by design wherever practicable. The status with regard to residual risks is as follows:

   The work is at an early planning stage and is not sufficiently advanced to allow a meaningful assessment of risks to be undertaken at this time.

   Designer - EDS Drawing revision - A
   Date - 30.05.23

8. Pipe routing and chamber locations shown indicative only.

DATE.	DRWN.	CHKD.	REV.	NOTES.
15.05.24	TPS	LT	C	DRAINAGE PROPOSALS AMENDED TO SUIT REVISED DEVELOPMENT LAYOUT
31.05.23	TPS	LT	B	SOUTHERN FOUL DRAINAGE ROUTE AMENDED
30.05.23	TPS	LT	A	PRELIMINARY ISSUE

PROJECT MANAGER:-	TIM SULLIVAN
PROJECT ENGINEER:-	TIM SULLIVAN
DRAWN DATE:-	MAY 2023
SCALE & SHEET SIZE:-	1:200 @ A1

PRELIMINARY

EDS
Engineering & Development Solutions
- Flood Risk Assessment
- SuDS and Surface Water
- Foul and Sewage Treatment
- Highway Design
- Civil Engineering
- Statutory Approvals

EDS, Unit E4, Threemilestone Industrial Estate, Threemilestone, Truro, Cornwall TR4 9LD (01872) 306311 (Mob) 07973816457
Email: jan@eadsolutions.co.uk
www.eadsolutions.co.uk

CLIENT
GAINSBOROUGH GROUP CONSTRUCTION LTD.

PROJECT
REDEVELOPMENT OF LAND AT 22 STATION ROAD. WARMINSTER.BA12 9BR

DRAWING TITLE
PLAN SHOWING PRELIMINARY FOUL AND SURFACE WATER DRAINAGE PROPOSALS

PROJECT No.	DRAWING No.	REV.
J-2865	3001	C

Appendix E Infiltration Risk Scoring

(Press Alt + Left Arrow to return if using Hyperlinks)

Pollutant Risk Score

Is the development site located outside of flood zone 2 or 3? — Yes

Is the depth to the maximum ground water level greater than one metre below the base of the SuDS component? — Yes

Is the total pollution score less than or equal to 180? (See below)

		Risk Score (RS)	Weighting Factor (WF)
Polution hazard traffic density	◉ Urban / ○ Other	1	15
Standard Average Annual Rainfall depth (SAAR depth)	○ < 740 mm / ◉ 740 - 1060 mm / ○ > 1060 mm	2	30
Type of SuDS	○ Continuous unlined linear collection and conveyance components / ◉ Shallow soakway (eg infiltration basin/trench permeable pavement)	2	30
Unsaturated zone depth	◉ > 15 m / ○ 5 - 15 m / ○ 1 - 5 m	1	20
Predominant flow type through soils between infiltration surface and groundwater	◉ Intergranular flow / ○ Mixed fracture and intergranular flow / ○ Fractured flow	1	20
Unsaturated zone material : Clay content	○ > 15 % Clay / ◉ 1 - 15 % Clay / ○ < 1% Clay	2	10
Unsaturated zone organic carbon content : Soil Organic Matter (SOM) content	○ > 15 % SOM / ◉ 1 - 15 % SOM / ○ < 1 % SOM	2	10
Unsturated zone material: soil pH	○ > 8 / ◉ 5 - 8 / ○ < 5	2	10
		Total	145

Yes

Is the SuDS device further than 5 metres away from a surface water feature? — Yes

Infiltration possible

Appendix F Hydroloop H300 Product Data

(Press Alt + Left Arrow to return if using Hyperlinks)

H300 PRODUCT DATA SHEET

With a Hydraloop device, you can recycle up to 95% of shower & bath water and optionally 50% of washing machine water – which enables you to reuse up to 45% of the total in-house domestic water. Due to its innovative and breakthrough technology, Hydraloop reusable water is clean, clear, safe and certified and for toilet flushing, washing machine, garden irrigation and/or swimming pool top-up.

HYDRALOOP H300

H300	Input: Greywater from shower and bath Output: Two (2) valves for reusable water to the toilets and the washing machine Colour: Stone Front Plate: Stainless-steel front plate with white coloured logo and small status light
H300 Premium	Input: Greywater from shower and bath Output: Two (2) valves for reusable water to the toilets and the washing machine Choose from three colours: Dew, Chili and Stone Front Plate: Premium stainless-steel front plate with Hydraloop LED logo lights

ADD-ONS

Output Garden (auxiliary outlet)	One (1) extra valve for reusable water in the garden
Output Pool (auxiliary outlet)	One (1) extra valve for reusable water for the pool
Washing Machine Option (diverter valve)	Option to recycle 50% of greywater from washing machine, including sanitary lift pump
Lift pumps *	DAB Novabox 30/300. This lift pump is submerged underneath the floor DAB Genix VT 030. This lift pump is on the floor

*A lift pump is only necessary if Hydraloop device is positioned on same floor or a story higher as shower/bathtub

*Please note that the DAB pump listed is not certified to be sold into NA

HYDRALOOP H300 SPECIFICATIONS

Volume	300 liters / 80 gallons
Cleaning capacity	530 liters / 140 gallons per day
Dimensions	80 cm wide, 34 cm deep, 187 cm high 31.5” wide, 13.4” deep, 74” high
Voltage	100 / 240V, 24V internal
Usage	20 W during treatment. Average power consumption: 200kWh/year
WiFi	The Hydraloop device needs to be connected with an internal WiFi-network
Average reusable water quality	Non-potable water: CBOD5: 6ppm TSS: 3 ppm Turbidity: 2 NTU E. coli: <1 MPN/100mL pH: 7.1
Noise Level	± 44 dB.

LED LIGHT INDICATIONS

White	Hydraloop device provides reusable water.
Blue	Hydraloop device provides backup water (until reusable water becomes available).
Purple	The washing machine mode is active.
Green	In self-cleaning mode.
Orange + two (2) short sound signals per minute	The UV disinfection lamp is not functioning properly.
Red + three (3) short sound signals/minute	The water distribution pump has switched itself off. Which might happen when water is leaking somewhere in-house.

CONNECTION OVERVIEW

Input connections

Main greywater inlet into the top of the Hydraloop device: 40 mm| 1 ½" OD

- Bring all greywater sources into one dedicated line.
- Please ensure all greywater lines are separated from black water.
- If the greywater input is on a higher floor than the Hydraloop device, gravity will direct the flow.
- In other circumstances, install a lift pump.

Greywater inlet to the Hydraloop device from

1 H300 H600 Shower
Bath

2 H600* Tumble dryer
Air conditioning
Heat pump

3 H300 H600 Optional: Washing machine (only with inlet diverter)
You can connect only one (1) washing machine per Hydraloop device

Power/Network connections

4 **Permanent WiFi internet connection:**
Bandwidth of 2.4GHz or 5 GHz
Ethernet & Bluetooth (v 2.0)

5 **Power supply:** 100-120V (60Hz) or 200-240V
Outlet to be within 1.2 m of device

6 **Backup water inlet**
Tap water or other: 15 mm | ½" MNPT – flow of 12 LPM| 3.2 USGPM
If the flow rate is higher than 12LPM| 3.2 USGPM, floater cap and flow regulator.
If you use a rainwater pump, install an expansion vessel and 50-micron mesh pre-filter.

Output connections

7 **Wastewater outlet**
Connection to sewer: 40 mm| 1 ½" OD (min. of 50 mm| 2") with rubber sleeve
Wastewater from the Hydraloop device to sewer (gravity) operates on a timer for wastewater release every 7 days

8 **Toilet flushing** (pressurized):

15 mm | ½" MNPT

9 **Washing machine** (pressurized):

15 mm | ½" MNPT

10 **Auxiliary outlet** (non-pressurized):

15 mm | ½" MNPT

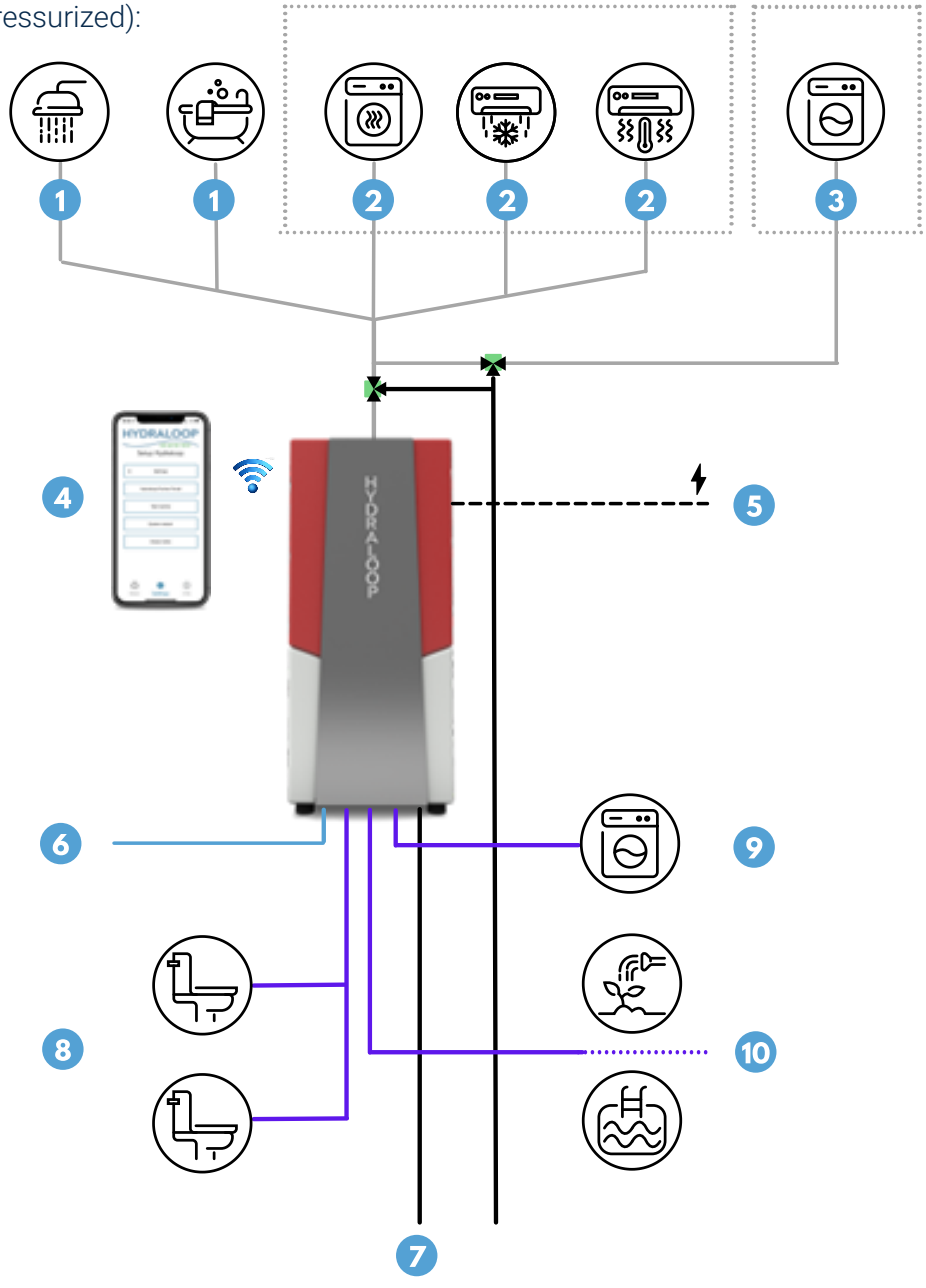

Appendix G Regional Background and Context

(Press Alt + Left Arrow to return if using Hyperlinks)

Following the ruling on the "Dutch N" (Case C-293/17 and C-294/17)[7] in November 2018 through the Court of Justice of the European Union (CJEU), as well as several other lower profile cases in Ireland, Natural England wrote a letter[8] to a number of planning authorities in March 2022 identifying unacceptable phosphate levels within the waterways of the River Avon SAC and requested greater scrutiny of planning applications going forward which would increase nutrient loads into the water system[9], resulting in the Protected Area (SAC or SPA reaching a point where the ability to return the site to favourable conditions would be compromised or necessarily limit the conservation objectives of the area.

As identified the site benefits from a pathway into the River Avon which encompasses/is hydraulically connected to the River Avon SAC, this area is protected as a European Site under the Habitat Regulations 2017, as well as comprising a SSSI (Sites of Special Scientific Interest) and an SPA (Special Protection Area) in the lower reaches of the Avon Valley. this is ratified by UK planning law under paragraph 176 of the NPPF[10]. The SAC and SPA form part of the UK's national site map with SACs constituting protected habitats and species that are considered of European interest. This is shared as a Designated Feature underpinning multiple SSSIs.



Figure G.1 – Protected sites in the River Avon catchment[11].

[7] C-293/17 - Coöperatie Mobilisation for the Environment and Vereniging Leefmilieu (Link-to-source)
[8] Natural England Letter to LPAs - Advice for development proposals with the potential to affect water quality resulting in adverse nutrient impacts on habitats sites.
[9] Reg. 63 of the Habitats Regulations 2017.
[10] NPPF – UK Government National Planning Policy Framework (Link-to-source)
[11] Protecting the Hampshire Avon – Essential Habitats Directive advice notes for developers



Figure G.2 – Species of River Avon SAC. From left to right: Sea lamprey, European bullhead, Desmoulin's whorl snail[12].

[12] JNCC – River Avon – Designated Special Area of Conservation (SAC)

Appendix H Nutrient Neutrality Underlying Science

(Press Alt + Left Arrow to return if using Hyperlinks)

Phosphorus is an essential nutrient for the continued and healthy growth of Flora, including crops, garden plants and flowers. Phosphates provide the sugar-phosphate backbone for DNA and RNA and therefore are essential for reproduction, they also are essential for photosynthesis and are required for energy transfer in cells, forming an integral part of ATP (Adenosine Triphosphate) and ADP (Adenosine Diphosphate).

Phosphorus is contained in large concentrations in NPK fertilisers used by farmers to ensure high crop yields and healthy plant growth, compensating for the loss of soil productivity associated with modern agricultural practises and the relative loss of the O-Horizon[13]. The relative lack of naturally occurring phosphorus and the disruption in the natural phosphorus cycle require phosphorus to be extracted from raw phosphate rock (a finite resource), this disturbs the natural balance of the region and often leads to nutrient pollution[14]. Beyond the cultivation of crops, phosphates are found further down the supply chain in commercial waste associated with food production and processing. They are also useful additives in household detergents as they chelate calcium and magnesium ions preventing the deposition of limescale[15], however the principal share of domestic phosphorus output comes from human waste as can be seen in **Figure H.1**.

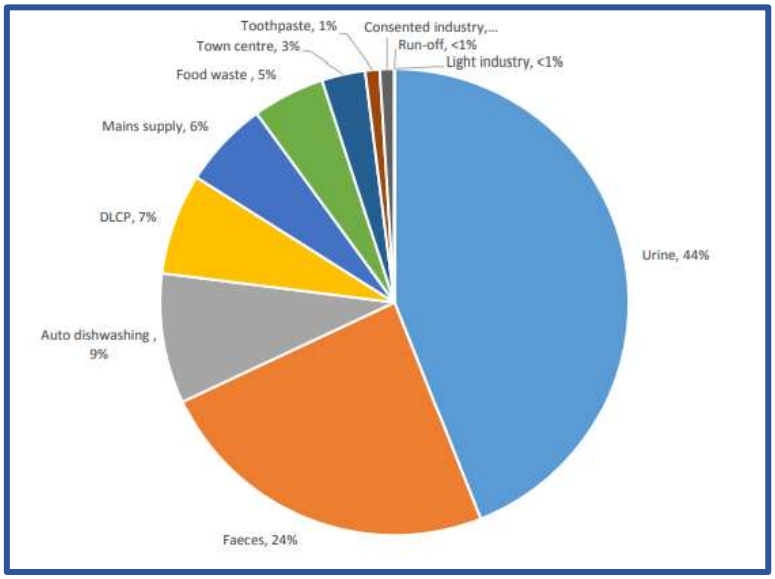

Figure H.1 – Breakdown of Phosphorus Arisings from Domestic Sources[16].

[13] O-Horizon – Britannica (Link-to-source)
[14] Environment Agency - Phosphorous and Freshwater Eutrophication Pressure Narrative (Link-to-source)
[15] European Commission - Phosphates and Alternative Detergent Builders (Link-to-source)
[16] Environment Agency - Phosphorous and Freshwater Eutrophication Pressure Narrative (Link-to-source)

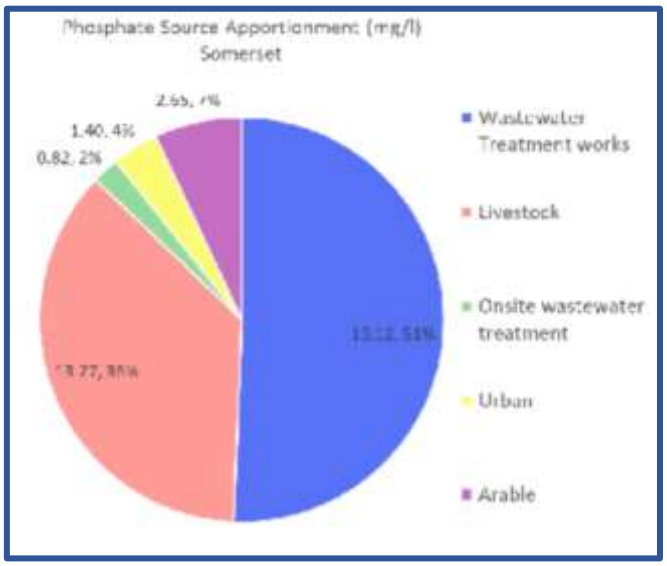

Figure H.2 – Phosphate Source Apportionment[17].

When nutrients are over sprayed due to variations in soil quality and the need to ensure proper nutrient spread, the excess is washed off the land by overland flows, these are either taken up by surface water sewer systems or discharged directly into local irrigation channels/open water courses[18]. Domestic nutrient arisings are usually taken away by foul/combined sewers into Wastewater Treatment Works (WwTWs), the treatment works employ Appropriate Treatment, Secondary Treatment or Advanced Treatment depending on the Population Equivalent of the Agglomeration they serve, the Downstream Receptor and depending on the quantity of Industrial Waste they are expected to accept. The treated water is then discharged into an appropriate receiving body, often rivers or watercourses[19]. Alternatively residential effluent is treated by a Package Treatment Plant and discharged into a watercourse directly or discharged to ground through a suitable Secondary Treatment Measure.

When nutrients enter the watercourse, they are taken up by aquatic plants which benefit in the same way as land based plants. However, high nutrient loads attract rapidly propagating plants such as Algae and Duckweed (*Genus Lemna*), which in the case of the former form dense monocultures called Algal Blooms (often called HABs – Harmful Algal Blooms)[20], this excessive plant/algal growth is called **Eutrophication**, the particular concern of Natural England is so called "Hyper Eutrophication".

[17] Collective Somerset Councils Letter to National Government.
[18] HR Wallingford – Greenfield Runoff Rate Estimation (Link-to-source)
[19] UK Government - Waste water treatment works: treatment monitoring and compliance limits (Link-to-source)
[20] UK Government – Algal Blooms (Link-to-source)



Figure H.3 – Example of at Surface Eutrophication.

Eutrophication is an excessive growth of filamentous Algae/Lemna which form in "mats" on the surface, these mats produce effects such as shading and smothering, which prevents sunlight reaching submerged oxygenating plants, which in turn die off and reduce the dissolved oxygen in the water body, additionally once the nutrient concentrations reduce there is a die-back of the Algal Blooms, which degrade at the bottom of the waterbody, this degradation is highly oxygen intensive and further removes dissolved oxygen. This lack of oxygen causes anoxia/hypoxia to species within the eco-system, which the environment can take years to recover from, if at all.

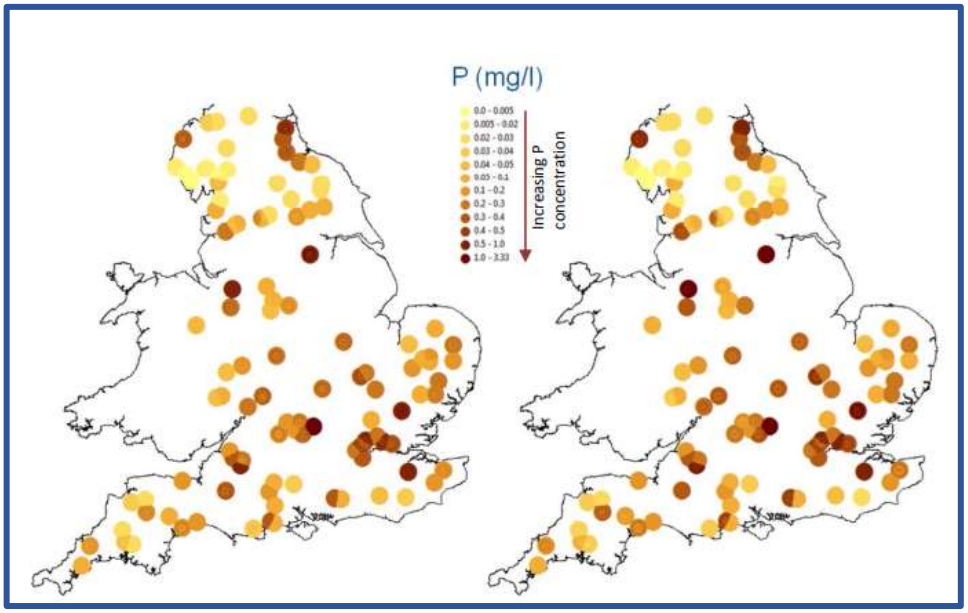

Figure H.4 – Estimated Phosphorus Concentrations for Study Sites as per Environment 2050s phosphorus concentrations Agency Report[21]

[21] Environment Agency - Climate change and eutrophication risk in English rivers (Link-to-source)