TIMBER WINDOWS OF BOURNEMOUTH

Your Timber Windows of Bournemouth, Blandford & Salisbury Quotation

For high performance engineered timber products

Quote Ref: 3397/1 V2

Date: Thursday 3 August 2023

Quotation Prepared for:
Chris Lewis
The Grange
Lake
Salisbury
Wiltshire
SP4 7BP

Scope of Project:

Replacement - Carefully remove existing items, prepare openings and supply and fit replacements. To include all making good of aperture ready for final decoration by others. All installed in full compliance with Building Regulations Document L (2010 Edition) by our trained and experienced installers.

Site Address: As quotation

Technical Specification:

All products in multi-layer Finger Jointed Redwood sections for added stability. Internally beaded throughout for security. Factory glazed with argon gas filled double glazed units featuring soft-coat energy saving glass. Drained and vented sections to protect against sealed unit failure. Fully factory finished with high performance, micro-porous paint treatments. Flush casement windows with high security multi-point locking systems and locking handles.Where FSC is shown against an item, joinery is supplied as FSC Mix Credit under Chain of Custody Registration No TT-COC-005135

Item	Qty	Item Reference	Product	Style	Remarks
1	1	Doomer	Conventional Flush Casement	DL21	Monkeytail - Black. Astragal Squares. White Finished. FSC
2	1	Doomer	Conventional Flush Casement	DL21	Monkeytail - Black. Astragal Squares. White Finished. FSC

Prepared By:
Ted Petre-Mears
Sales Consultant

Showroom: Salisbury

Your Project is covered by:

TIMBER ASSURED

Valid upon registration. Ask for full details

Nett Price:
VAT (20%):
Total Price:

QUOTATION VALID FOR: 30 DAYS

Lead Time:

* Approximately 18-20 weeks from Sign Off of Final Detail.

Terms:

Deposit with Order: 50%

Stage payment approximately two weeks prior to installation: 40%

On day of completion to installers: 10%

Your Guarantees:

Fungal & Insect	Sealed Unit	Hardware	Workmanship	Paint	Stain
30 YEARS GUARANTEE	10 YEARS* GUARANTEE	10 YEARS GUARANTEE	10 YEARS GUARANTEE	12 YEARS GUARANTEE	UP TO 6 YEARS+ GUARANTEE

* 5 years for 14mm double glazed units.

+ 6 years for Meranti & Redwood. 1 year for Oak. Not applicable to putty finished products.

Terms & conditions apply. Full details available upon request.

Item: 1	CONVENTIONAL FLUSH CASEMENT IN FINGER JOINTED REDWOOD	Quantity: 1
Style: DL21	Item Reference: Doomer	Quote Ref: 3397/1 V2

Key Features:

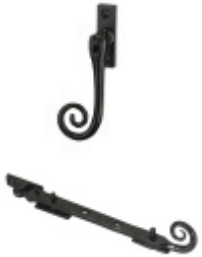

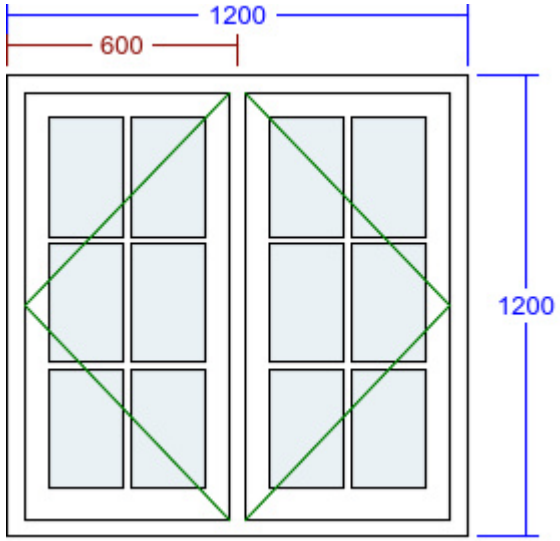

Detailed Specification:

VIEWED FROM OUTSIDE. POINT OF ARROW DENOTES HINGE POSITION.

Width (mm)	1200	Head Drip	None	Glass Pattern	Clear
Height (mm)	1200				
Frame Head Size	60mm	Add Ons Required	No	Glass Type	4mm Annealed
Feature Mould	Ovolo	Trickle Vents Required	No	Glazing Features	Astragal Squares
				Size of Bar	18mm
Floating Mullion	No	Window Board Required	No		
Equalise Glass Widths	Yes			Handle	Monkeytail - Black
				Peg Stay Alignment	Opening end pointing to handle
Colour	White (RAL 9003)			Peg Stay	Monkeytail - Black
				Dummy Hinges	None
Cill	None			Hinge System	Pivot with Seigenia locks
				FSC Certified	Yes

Item: 2	CONVENTIONAL FLUSH CASEMENT IN FINGER JOINTED REDWOOD	Quantity: 1
Style: DL21	Item Reference: Doomer	Quote Ref: 3397/1 V2

Key Features:

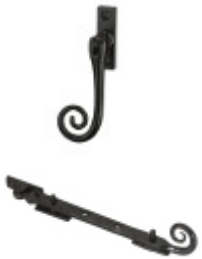

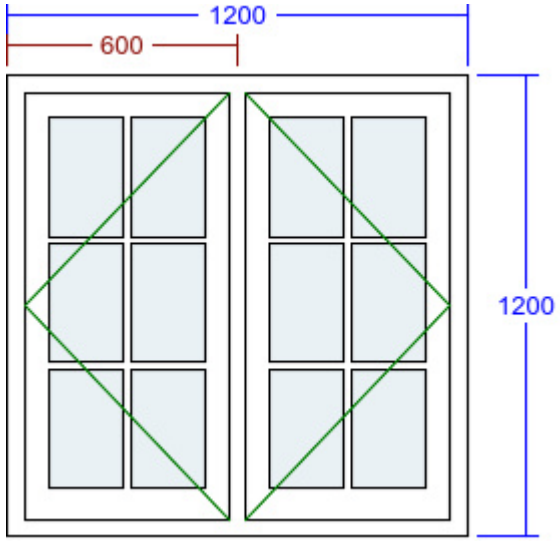

Detailed Specification:

VIEWED FROM OUTSIDE. POINT OF ARROW DENOTES HINGE POSITION.

Width (mm)	1200	Head Drip	None	Glass Pattern	Clear
Height (mm)	1200				
Frame Head Size	60mm	Add Ons Required	No	Glass Type	4mm Annealed
Feature Mould	Ovolo	Trickle Vents Required	No	Glazing Features	Astragal Squares
				Size of Bar	18mm
Floating Mullion	No	Window Board Required	No		
Equalise Glass Widths	Yes			Handle	Monkeytail - Black
				Peg Stay Alignment	Opening end pointing to handle
Colour	White (RAL 9003)			Peg Stay	Monkeytail - Black
				Dummy Hinges	None
Cill	None			Hinge System	Pivot with Seigenia locks
				FSC Certified	Yes