A2 paper size

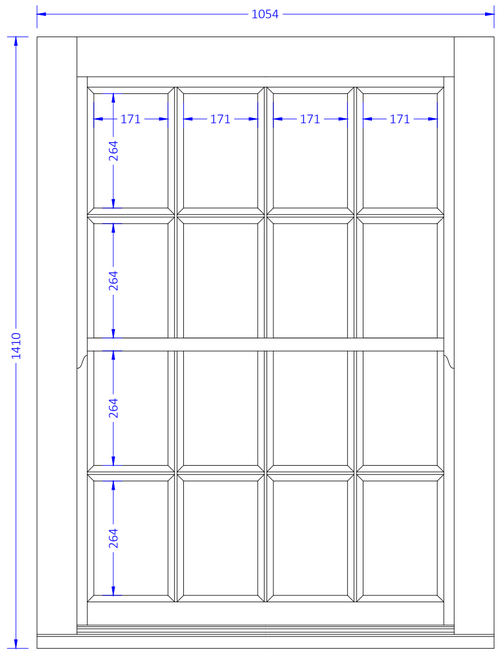

2 EXTERNAL ELEVATION
Scale: 1:10

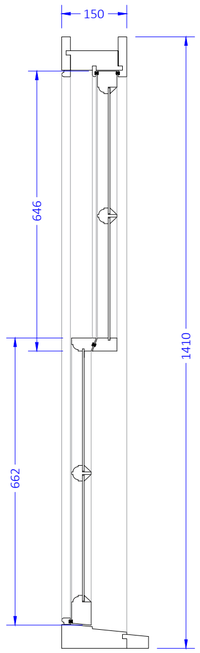

3 HEIGHT SECTION
Scale: 1:10

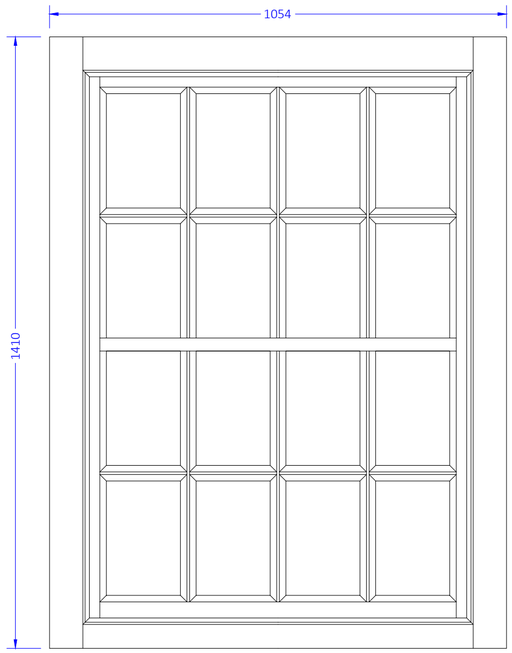

4 INTERNAL ELEVATION
Scale: 1:10

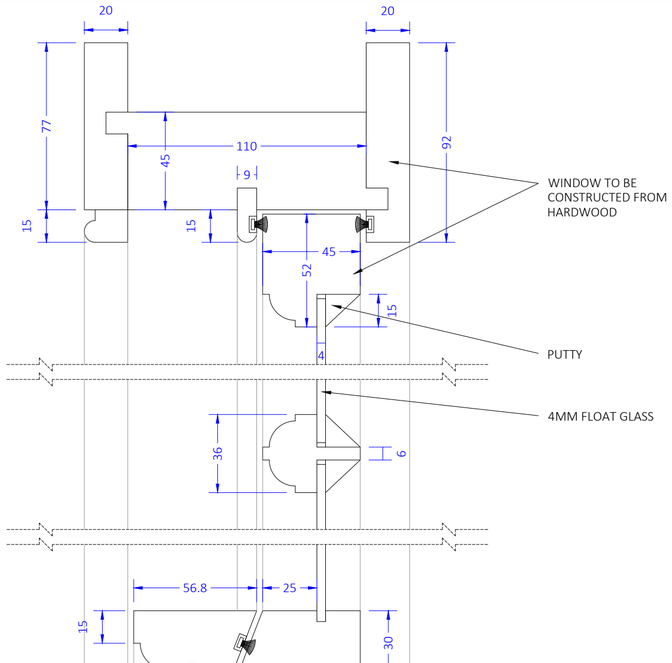

6 HEIGHT SECTION DETAILS
Scale: 1:2

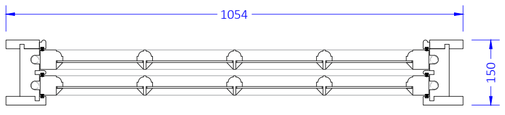

5 CO-ORDINATED PLAN SECTION
Scale: 1:10

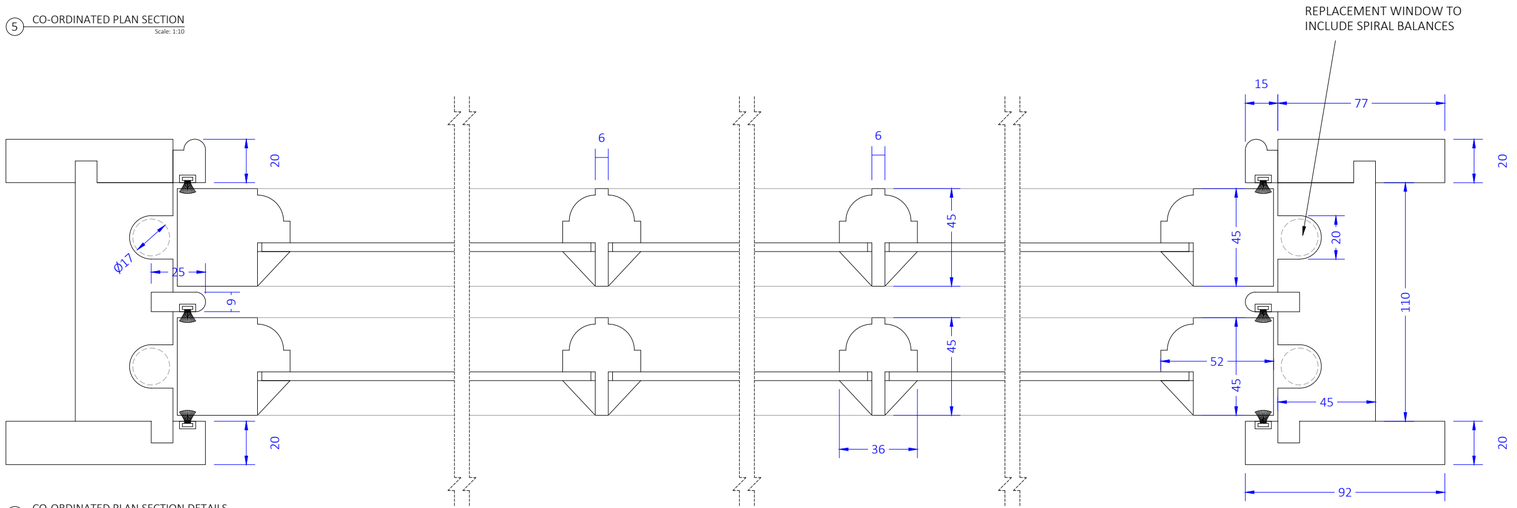

7 CO-ORDINATED PLAN SECTION DETAILS
Scale: 1:2

SCALE 1:250
SCALE 1:10
SCALE 1:2

SLIDING SASH WINDOWS (WITH SPIRAL BALANCES)			
WINDOW REF NO.	DESCRIPTION	WIDTH	HEIGHT
Window #24	Sliding sash window	1055mm	1410mm

1 ELEVATIONS TO SHOW WINDOW LOCATIONS
Scale: 1:250



SOUTH ELEVATION

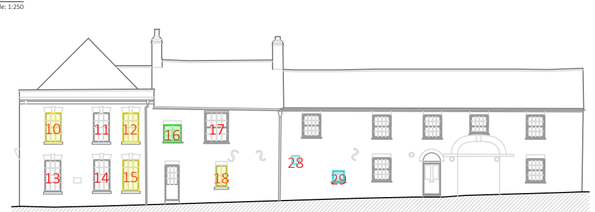

EAST ELEVATION



WEST ELEVATION



NORTH ELEVATION

SLIDING SASH WINDOWS (WITH WEIGHTS) 9no. REQUIRED

SLIDING SASH WINDOWS (WITH SPIRAL BALANCES) 1no. REQUIRED

CASEMENT WINDOWS 5no. REQUIRED

GLAZED FRAMES 2no. REQUIRED

Drawing title:
TYPICAL SLIDING SASH WINDOW (SPIRAL BALANCES)

Project:
32a - 36 PARK ST
DEVIZES, SN10 1DZ

Drawn by:	Date:
Jon Lewis	21.03.24
Drawing No:	**Revision:**
0103-02	C

Revisions:

Rev	Date	Notes
A	22.03.24	Minor updates
B	25.03.24	Minor updates
C	15.04.24	Scale bars added

KINGSDOWN

www.kingsdownjoinery.co.uk
harryw@kingsdownjoinery.co.uk
07512 757199

© NO UNAUTHORISED REPRODUCTION