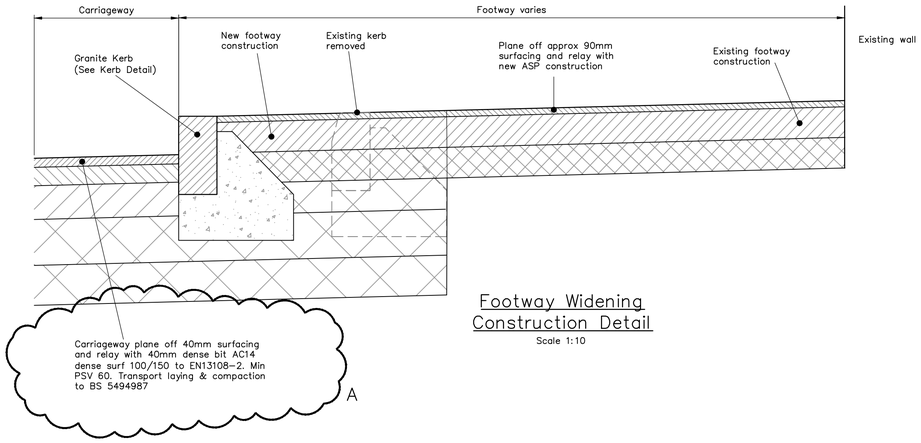

Footway Widening Construction Detail

Scale 1:10

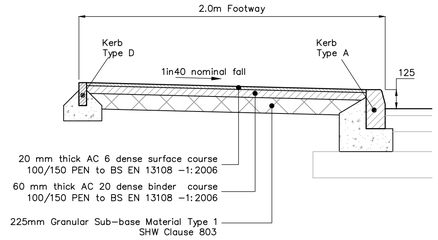

Asphalt Concrete Footway Construction Detail

Scale 1:20

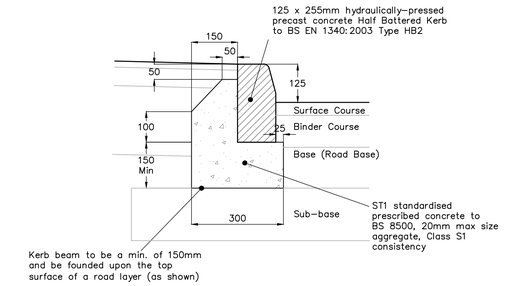

Kerb Type A HB2 Kerb

Scale 1:10

Kerb Type B

'Kassel' Standard to HB2 transition
(REF - KK60T- LH, REF - KK60T- RH)

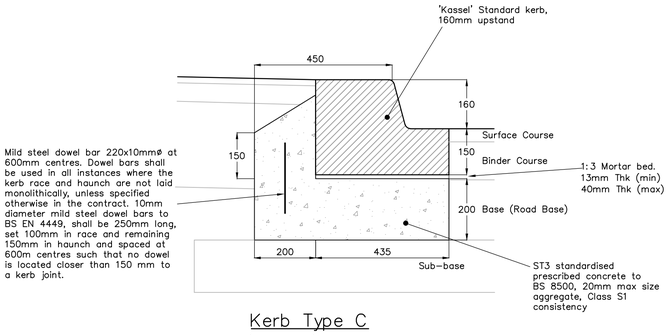

Kerb Type C 'Kassel' Kerb

Scale 1:10

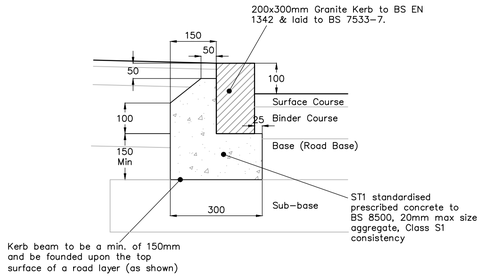

Kerb Type D Granite Kerb

Scale 1:10

Kerb Type G

DL1 & DR1 to be used at each end of crossing. Kerb face to change from 125mm to 0-6mm for pedestrian crossings and 125mm to 25mm vehicle crossing.

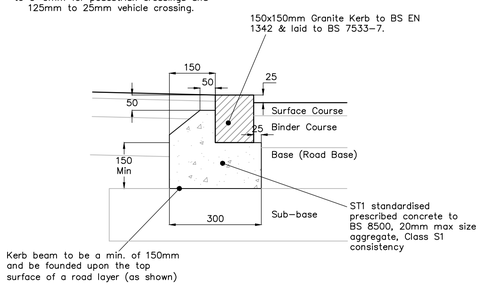

Kerb Type E Granite Kerb

Scale 1:10

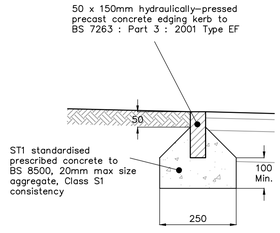

Kerb Type F Edging Kerb

Scale 1:10

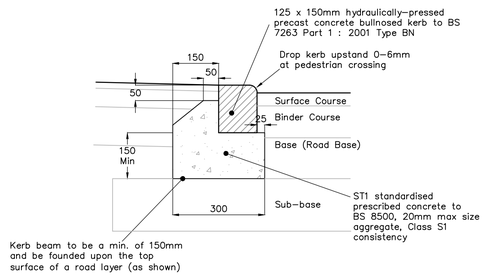

Kerb Type H BN3 Kerb

Scale 1:10

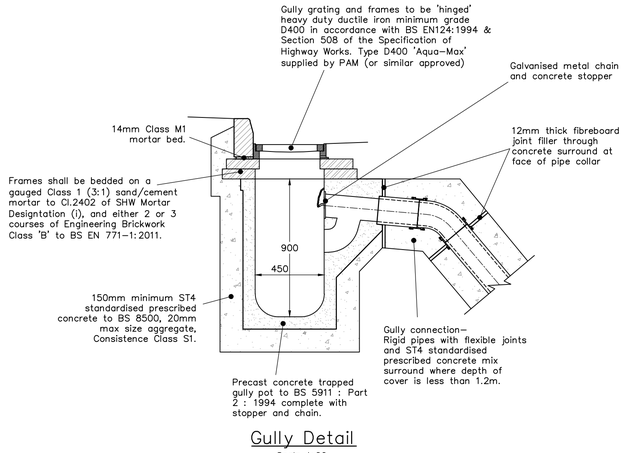

Gully Detail

Scale 1:20

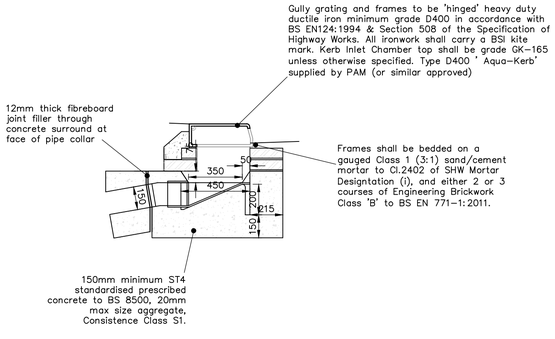

Kerb Inlet/Sumpless Gully Detail

Scale 1:20

PFA consulting

Stratton Park House, Wanborough Road
Swindon, SN3 4HG

Telephone
01793 828000

Website
www.pfaplc.com

For Technical Approval
This drawing is produced for the purposes of obtaining the approval of an adopting or maintaining authority, and reliance on this drawing, for whatever purpose, is at the developer's/contractor's risk until formal technical approval has been received.

NOTES

1. All adoptable highway works to be constructed in accordance with the current version of the Specification for Highway Works (SHW), published by The Stationery Office as Volume 1 of the Manual of Contract Documents, as amended and Wiltshire County Council's Standard Detail drawings.
2. The Contractor shall seek clarification from the Engineer regarding any contradiction between this drawing and the Specification.
3. The contractor shall confirm the CBR of the sub-grade and share results with the Highway Authority in order to determine the required sub-base thickness. Any revisions to the pavement design and specification to be agreed prior to construction. The Highway Inspector is to be present during inspections/CBR testing.
4. Prior to laying any material the subgrade must be proof rolled and inspected and any soft spots removed and filled with Type 2 material to SHW Clause 804. The sub-formation and formation shall be prepared in accordance with SHW clause 616.
5. Where fill is required beneath subformation or formation, this shall be carried out in accordance with SHW Clause 608.
6. All materials within 450mm of finished levels should be non-frost susceptible.
7. All covers within the highway (including private chambers) shall be in accordance with BS EN124, stamped to indicate accreditation by BSI, LRQA, or SGSY and all those within the carriageway shall be grade D400.
8. All road markings to be in accordance with the Traffic Signs Regulations and General Directions 2016 and shall be laid out in accordance with the Traffic Signs Manual Chapter 5.
9. Permanent road markings shall be white, Methyl Methcrylate road marking material complying with SHW Clause 1212.
10. All materials to be handled/laid in accordance with the relevant British Standard or accepted Quality Assurance Scheme.
11. All measurements in millimetres unless otherwise shown.

Rev	Date	Description	Drawn	Check
#	23/12/22	First Issue.	DRM	RMH
A	04/04/24	Carriageway resufacing note added.	DRM	CI

Status

FOR TECHNICAL APPROVAL

Client

Wiltshire Council

Project

Silverwood School (Rowde Campus)

Drawing Title

Section 278 - Series 0100 Improvements on A342 and School Access Construction Details

Drawing No. **W630/0705** Rev. A

Date: September 2022 | Scale: As Shown @ A1

E-Mail: [redacted]