THIS DRAWING AND SPECIFICATIONS ARE THE PROPERTY OF THE PERFORMANCE WINDOW GROUP. THEY ARE ISSUED IN STRICT CONFIDENCE AND SHALL NOT BE REPRODUCED, COPIED OR USED AS THE BASIS FOR MANUFACTURING WITHOUT WRITTEN PERMISSION.

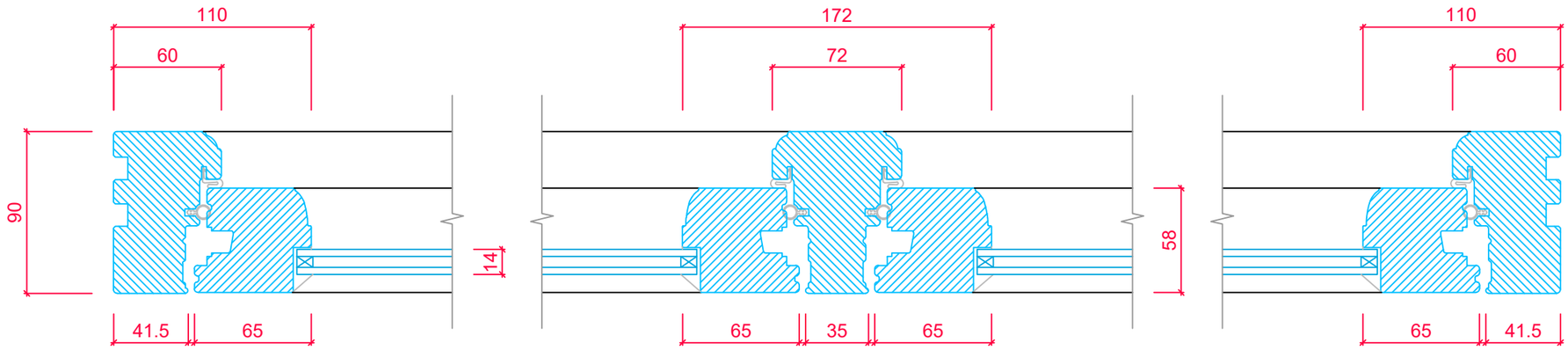

CASEMENT CROSS SECTION 'A-A'

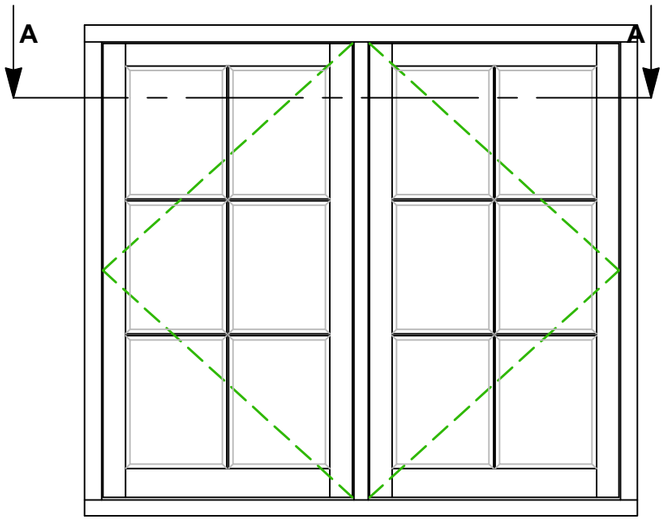

TYPICAL CASEMENT LAYOUT

TIMBER WINDOWS EST. 2004

PRODUCT RANGE:
FLUSH CASEMENT (*Ovolo*)
14mm Narrow Cavity Unit

TITLE
HORIZONTAL SECTION DETAIL
- WITH MULLION

REVA

DRAWN BY:	PR	DATE DRAWN:	01/11/2023	SCALE:	1:3/1:15@A3

Din A3

ALL MEASUREMENTS ARE FINISHED DIMENSIONS IN MM.

DO NOT SCALE DRAWING!