THIS DRAWING AND SPECIFICATIONS ARE THE PROPERTY OF THE PERFORMANCE WINDOW GROUP. THEY ARE ISSUED IN STRICT CONFIDENCE AND SHALL NOT BE REPRODUCED, COPIED OR USED AS THE BASIS FOR MANUFACTURING WITHOUT WRITTEN PERMISSION.

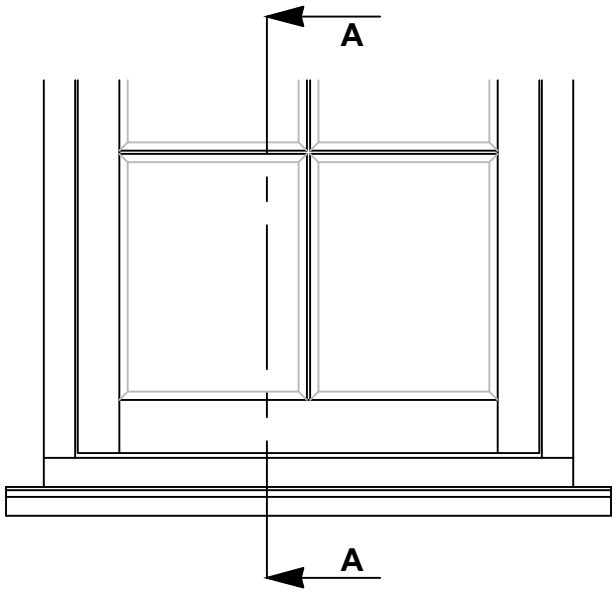

38mm CILL ELEVATION WITH 50mm HORNS L+R

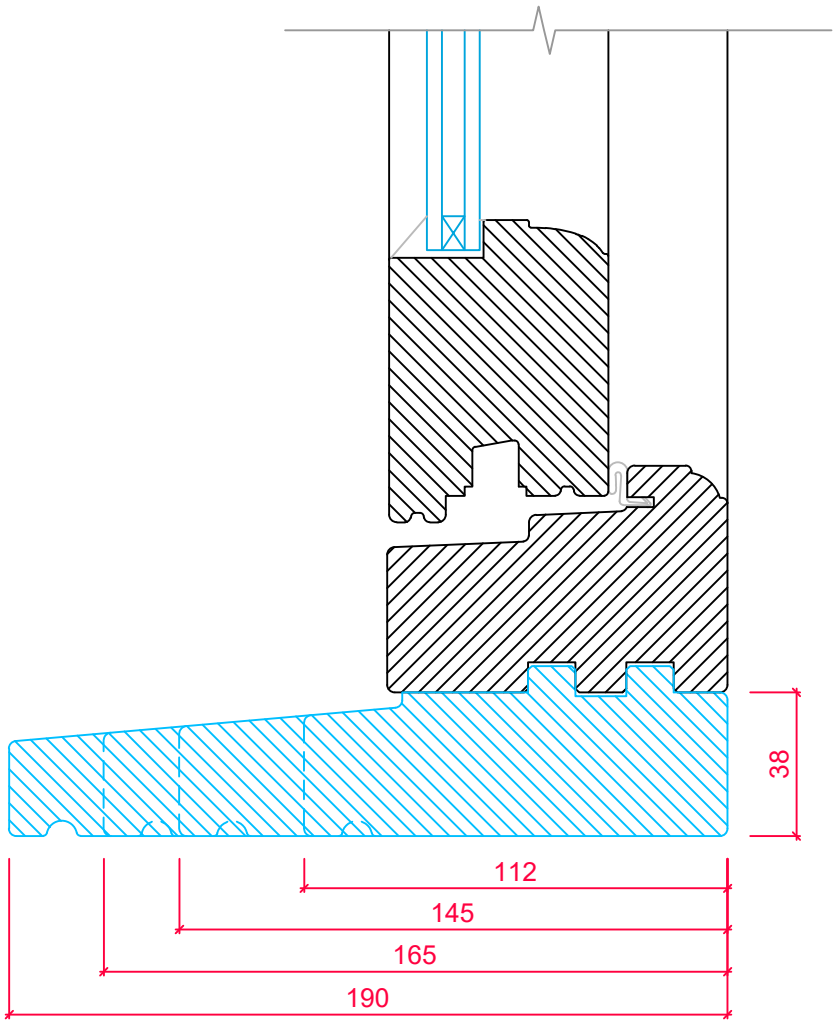

38mm CILL OPTIONS SECTION 'A-A'

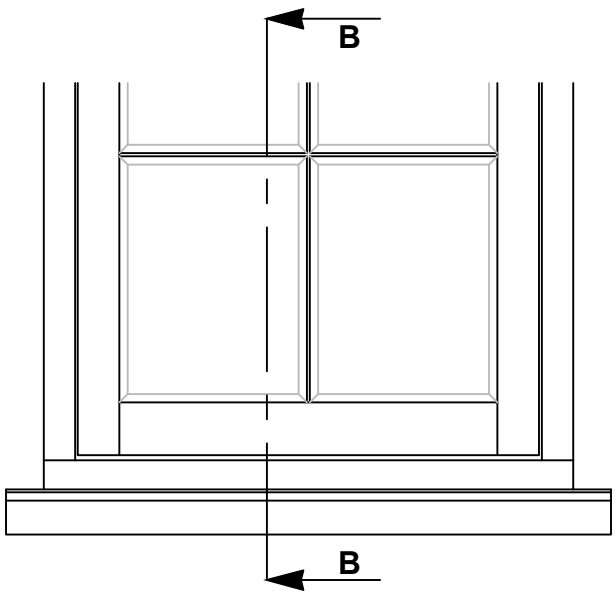

60mm CILL ELEVATION WITH 50mm HORNS L+R

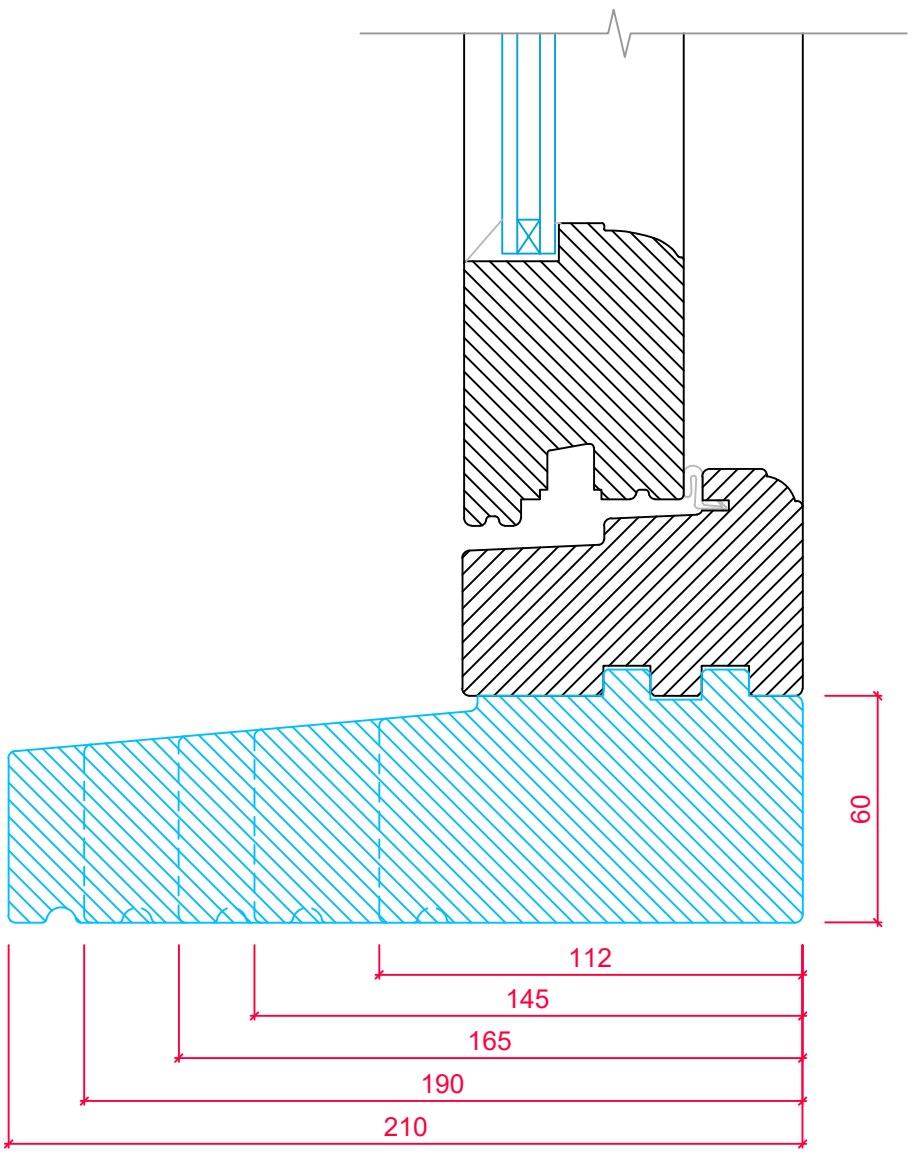

60mm CILL OPTIONS SECTION 'B-B'

TIMBER WINDOWS EST. 2004

PRODUCT RANGE:
FLUSH CASEMENT (*Ovolo*)
14mm Narrow Cavity Unit

TITLE
VERTICAL SECTION DETAIL
- STANDARD CILL OPTIONS

REVA

DRAWN BY:	PR	DATE DRAWN:	01/11/2023	SCALE:	1:2/1:10@A3

ALL MEASUREMENTS ARE FINISHED DIMENSIONS IN MM. DO NOT SCALE DRAWING! Din A3