Beech Tree Solar Farm, Salisbury
Ecology Technical Note: Post-submission Response Regarding Ecological Matters
edp7926_r006a

QA: JGw/GCr_EDa/CTi_180324

1 INTRODUCTION

1.1 The Environmental Dimension Partnership Ltd (EDP) has been commissioned by Low Carbon ('the Applicant') to prepare a response to the post-submission comments from Wiltshire Council Local Planning Authority (LPA) on the application (reference: PL/2023/10394) for the proposed solar farm development at Beech Tree Solar Farm, Salisbury (hereafter referred to as 'the Site').

1.2 The comments received from the LPA relating to ecology are provided in **Appendix EDP 1**.

Site Context

1.3 The Site is centred approximately at Ordnance Survey Grid Reference (OSGR) SU122274. and described in the material supporting the planning application. The Site measures 41 hectares (ha) and is located within the outskirts of Salisbury, Wiltshire. It comprises two large arable fields. The fields are bound by a network of woodlands and hedgerows. The location and extents of the Site are illustrated on Extended Phase 1 Habitat Plan (see **Plan EDP 1**).

Development Proposals

1.4 In brief, the proposed development comprises the construction and operation of a solar photovoltaic farm with associated infrastructure.

1.5 The proposals are to be the subject of a full planning application using the Rochdale Envelope approach, and the Development Zone Plan, which will be the 'approved plan', is provided as **Appendix EDP 2**. The Illustrative Site Layout Plan is provided as **Appendix EDP 3**.

1.6 The ecological sensitivities of the Site have influenced the final layout through an iterative design process. Thus, the Development Zone Plan incorporates a degree of 'inherent' mitigation to avoid or reduce the severity of potential ecological impacts.

2 RESPONSE TO COMMENTS

2.1 The LPA Ecologist raised a number of queries in response to the ecology documents submitted alongside the planning application. EDP's response to these queries, alongside further information and context to alleviate any concerns, is provided below.

Skylark

2.2 A total of two probable and seven possible breeding pairs of skylark (*Alauda arvensis*) were identified as nesting within the arable farmland within the Site in 2023. The scheme will result in the loss of suitable arable farmland within the Site; therefore, an outline skylark mitigation strategy has been recommended. Following the LPA Ecologist comments, this will be provided prior to determination (report reference: edp7926_r007) and an overview of the strategy is set out below.

2.3 The scheme is to provide 18 skylark plots on 9ha of arable farmland to compensate for the loss of arable farmland within the Site, which will be located on land under the Applicant's control and within proximity to the scheme to increase the likelihood of colonisation. Details are to be provided and agreed with the LPA Ecologist. The skylark plot creation will comply with the following parameters:

- Locating the plots in an arable field of winter or spring cereal crops with an open aspect;
- Locating plots a minimum of 10m from boundary features including woodland, hedgerows and treelines, and should avoid tramlines and telegraph poles; and
- Plots to be established at a minimum density of two plots per hectare.

2.4 A formal agreement is to be prepared between the Applicant and landowner to provide an overview of the management responsibilities and measures required. The management and monitoring measures to be implemented include:

- Should spot-treatment with herbicide be required, this will only be permitted in April to ensure the vegetation does not get too high, which could discourage breeding;
- Where there are skylark plots in the field(s), mechanical weeding will not be permitted to prevent nests from potentially being destroyed;
- The appointed ecological consultant will be responsible for monitoring the skylark plots; and
- Following each monitoring period, to be confirmed with the LPA Ecologist, any remedial action required to plots, considered necessary to maintain their size, habitat type and structure, will be undertaken by the landowner as soon as possible and prior to the following breeding season. If declines in skylark populations are recorded, remedial action will be undertaken.

Bats

2.5 The ecological assessments undertaken by EDP included a ground level tree assessment for all trees within the Site and wider Study Area. The scheme will retain all trees of suitability to support roosting bats within the Site. However, crown reduction works to remove deadwood is proposed for trees **T17** and **T18** (see **Appendix EDP 4**). Tree **T18**, shown as **T16** on **Plan EDP 1**, is located just outside of the Site, however, works to this tree will be required due to the health and safety concerns it poses.

2.6 Based on the categories for the 2016 best practice guidance[1], tree **T16** is of moderate suitability to support roosting bats due to supporting exposed, mature ivy on the main trunk (see **Table EDP 2.1**). However, following the publication of the new best practice guidelines in 2023[2], the suitability of the tree was re-assessed in accordance with the new categories in Table 6.2 of the guidance. Based on this, the Potential Roost Feature (PRF) present has been provisionally categorised as PRF-I due to its likely suitability to support individual bats only (see **Table EDP 2.1**). Due to the location of the PRF on the main trunk and the nature of the works proposed, which include crown reduction rather than felling of the tree, it is considered unlikely that any roost (if present) would be damaged or lost. However, there is potential for short-term indirect impacts through disturbance. This potential disturbance could be avoided with suitable timing of the work.

Table EDP 2.1: Details of Trees with Bat Roost Suitability

Tree Reference Number	Potential Roost Feature	Roosting Suitability 2016	Roosting Suitability 2023	Photograph
T16	Tree supports mature ivy (*Hedera helix*) on the main trunk.	Moderate	PRF-I	

2.7 As such, no further bat roost surveys of this tree are considered necessary at this stage, however, an inspection survey of the tree will be undertaken prior to any arboricultural works. Precautionarily and given the negligible hibernation suitability of the PRF on the tree, such works will be undertaken outside of the bat active season (April to October inclusive) to minimise the potential for disturbance. Furthermore, three bat boxes will be installed on nearby retained trees to provide enhanced roosting opportunities for bats in the locality. Should a bat be found during the pre-works inspection of the tree, works will not commence until a licence is obtained or an amended avoidance method statement prepared as required.

[1] Collins, J. (ed.) (2016). *Bat Surveys: for Professional Ecologists: Good Practice Guidelines* (3rd edition). The Bat Conservation Trust, London

[2] Collins, J. (ed.) (2023). Bat Surveys for Professional Ecologists: Good Practice Guidelines (4th edition). The Bat Conservation Trust, London

2.8 The LPA Ecologist alluded to the recent research paper *Renewable energies and biodiversity: Impact of ground-mounted solar photovoltaic sites on bat activity* (August 2023)[3]. This research found that *"the activity of six of eight species/species groups analysed was negatively affected by solar PV panels, suggesting that loss and/or fragmentation of foraging/commuting habitat is caused by ground-mounted solar PV panels"*. However, it should be noted that the research compared solar sites with control sites of the same broad habitat type. As such, it does not account for any habitat enhancements delivered as part of the solar proposals. The majority of the Site currently supports low value, intensively farmed arable fields, which will be enhanced as part of the proposals to sympathetically managed grassland with meadow flower margins. This change will undoubtedly benefit invertebrates and thereby enhance foraging opportunities for bats and other wildlife.

2.9 This is supported by a recent study by Lancaster University in collaboration with the University of Reading from February 2024[4] which noted that solar farms within the UK, if managed correctly, can be crucial resources for pollinators including moths, hoverflies, bees and butterflies. Solar sites which support a variety of flowering species in locations with disconnected landscapes, such as fewer connecting hedgerows, will benefit pollinators the most.

2.10 The proposed scheme will provide a mixture of modified and other neutral grassland post-development which will deliver a significant uplift to the ecological value of the Site. An overview of the management measures to be implemented will be outlined in a Framework Landscape and Ecology Management Plan (FLEMP) (reference: edp7926_r008) which will be provided pre-determination. Habitat management measures to be implemented are to include sheep grazing of the meadow grass (modified grassland) below the solar panels and the biannual cutting of wildflower grassland (other neutral grassland) around the solar panel footprint which will create a variety of niches for invertebrates on-site. The wildflower grassland is to be cut outside of the pollinator active period to ensure the Site continues to support invertebrate populations throughout this period, and these areas will not be treated with herbicides or pesticides.

2.11 Due to this and the nature of the surroundings, which primarily comprises large, open arable fields with poor hedgerow connectivity, it is considered likely that the construction of a solar farm on-site will benefit pollinators within and around the Site. This will in turn increase foraging opportunities for bats.

2.12 The boundary features most valuable to bats will primarily be retained and enhanced through the supplementary planting of new, species-rich hedgerows in gaps in the hedgerow network to improve connectivity around the Site. A minimum 10m no build buffer zone is to be provided adjacent to the off-site woodland to the north and has been widened to 10m adjacent to all boundary features within the Site including all hedgerows, which will maintain connected foraging and commuting corridors for bats. All infrastructure such as roads and

[3] Tinsley, E., Froidevaux, J.S., Zsebők, S., Szabadi, K.L. & Jones, G., (2023)., *Renewable energies and biodiversity: Impact of ground-mounted solar photovoltaic sites on bat activity*. Journal of Applied Ecology, 60(9), pp.1752-1762.

[4] Blaydes, H., Potts, S. G., Whyatt, J. D. & Armstrong, A., (2024). *On-site floral resources and surrounding landscape characteristics impact pollinator biodiversity on solar parks*. In EGU General Assembly Conference Abstracts (pp. EGU22-2180).

inverters, security fencing and solar arrays which could potentially disrupt the commuting routes will be excluded from the 10m buffer zones. These buffer zones will be unlit and over-seeded with a species-rich wildflower grass seed mix to further increase foraging opportunities for bats and other wildlife including birds.

2.13 Whilst the minimal loss of c.0.01km of species-poor native hedgerow is anticipated, given the location and small quantity of hedgerow loss proposed, this is considered unlikely to significantly impact foraging and commuting bats. All retained and proposed hedgerows will also be subject to an appropriate management regime to maintain a minimum 3m height and 3m width to provide optimal corridors for bats. An overview of the hedgerow management measures to be implemented is outlined in the FLEMP, and a full Habitat Management and Maintenance Plan will be provided, which can be secured by planning condition.

2.14 The proposed development will require a small amount of targeted lighting to be used infrequently, for emergency maintenance purposes only, around the substations. To ensure the scheme does not adversely impact light sensitive bats, a sensitive lighting strategy will be prepared and be adopted during the construction and operational phases. Such a strategy is unable to be prepared at this stage of the project but can be secured by planning condition to ensure the LPA can agree to the details prior to the commencement of the development.

2.15 Therefore, following clarification of the buffer zones to be provided adjacent to all boundary features, in addition to the proposed habitat management measures, the proposed scheme and integrated mitigation are considered to be sufficient to avoid/mitigate any negative impacts on the local bat assemblage. Furthermore, the proposed enhancement measures are likely to deliver an overall benefit to the local bat population through increased prey for foraging and increased roosting resources via the bat boxes. As such, bat activity surveys are not considered necessary for this scheme.

Cable Route

2.16 The cable route is not a material consideration for this application and will therefore not be addressed as part of this application. This will instead be dealt with in a separate planning application to be submitted to the LPA in the near future. Further details are provided in **Appendix EDP 5**.

Landscape and Ecology Strategy Plan

2.17 The proposed woodland and hedgerow buffer zones were provided on the Landscape and Ecology Strategy Plan as annotations. The plan has been updated to mark out the buffer zone with accompanying text in the legend to make the buffer zones clearer, as can be seen on **Plan EDP 2** including accounting for the widened 10m buffer zone proposed adjacent to the boundary hedgerows. Furthermore, the plan has been updated to provide indicative locations for the proposed bat and bird boxes. Further details of the type of bat and bird boxes proposed are provided in the FLEMP.

Biodiversity Net Gain

2.18 The Biodiversity Net Gain (BNG) metric calculation and habitat condition assessments will be submitted alongside this Ecology Technical Note. Furthermore, the pre- and post-development habitat plans have been updated to present the existing habitat areas/lengths, in addition to the areas/lengths of proposed habitat retention, loss, creation and enhancement, for clarity. This can be seen on **Plans EDP 3** and **4**. The previously submitted BNG calculations have not been updated to include the increased 10m buffer zones to be provided. However, it is considered likely that this would positively impact the BNG score, and as such, it is not considered necessary to update the BNG calculation at this stage. The buffer zone will be included in the update BNG calculation to be undertaken to support the Reserved Matters planning application.

2.19 An overview of the proposed habitat management and maintenance measures to be implemented to ensure the habitats meet the proposed condition criteria is outlined in the FLEMP, which is also to be provided alongside this Ecology Technical Note.

Habitat Management and Maintenace Plan

2.20 Wiltshire Council have outlined a Solar PV Farms and Ecology: Developer Advice Note[5] which states that a Landscape and Ecology Management Plan (LEMP) will be required to support a planning application. The proposed development is for a full planning application using the Rochdale Envelope approach, and the development layout and landscape design submitted are illustrative only. Given that not all of the details are available for the scheme at this stage, we are unable to provide a detailed LEMP, however, an FLEMP will be provided pre-determination to provide an overview of the management and maintenance measures to be undertaken throughout the lifetime of the scheme. This is considered sufficient to support the application at this stage. A detailed Habitat Management and Maintenace Plan (HMMP) and full LEMP will be provided once the details of the scheme have been finalised, and this can be secured by planning condition.

3 CONCLUSIONS

3.1 This Ecology Technical Note provides a response to post-submission comments from the Wiltshire LPA Ecologist regarding the proposed development at Beech Tree Solar Farm, Salisbury.

3.2 EDP considers that the responses and additional details set out above, and in the documents accompanying this Ecology Technical Note, provide sufficient information to address the concerns raised.

[5] Wiltshire Council., (2021). *Solar PV Farms and Ecology: Developer Advice Note.*

Appendix EDP 1
Wiltshire Council: Biodiversity Officer Response

Wiltshire Council Planning Consultation Response

ECOLOGY

Officer name:	Jenna Buss
Date:	27/02/2024
Application number:	PL/2023/10394
Proposal:	Construction and operation of a solar photovoltaic farm and associated infrastructure
Site address:	Land South of Salisbury Road, nr Homington, Coombe Bissett, Salisbury
Case officer:	Joe Richardson

Recommendations:

	No Comment
	Support
	No objection
	Condition (no objection subject to conditions)
X	Objection - further information required
	Objection in principle
	HRA completed

Further Information Required:

	Issue	Policy/Legislative Compliance	Date information requested & Further information required	Satisfactorily addressed (Document & Date)
1	Protected Species/Habitats	NPPF, CP50, Habs Regs	Bat transect surveys Skylark Mitigation Strategy	
2	Biodiversity Net Gain	NPPF, CP50	Submission of the unlocked Biodiversity Metric spreadsheet used to calculate no net loss, and where appropriate BNG, accompanied by maps referencing the current measured habitats within the site and those proposed for mitigation or for BNG.	
3	Mitigation and Enhancement	NPPF CP50	Additional information in line with published guidance: Solar PV Farms and Ecology is required to include a HMMP	

The outstanding document(s) listed above are needed to enable the council's ecology team to consider all the relevant impacts and benefits of the proposed scheme. The council's ecologists will provide a further response once all the above information has been submitted via the case officer.
Please Note: When resubmitting a revised document, ALL changes must be highlighted to enable review.

Thank you for consulting Ecology, I have reviewed the application and additional documents against OS Maps and aerial photography of the site and surrounding area, together with GIS layers of statutory and non-statutory sites and existing records of protected species.

The application is supported by the following documents:

- Ecological Appraisal. November 2023. EDP;
- Landscape Plan edp7926_d010c. November 2023. EDP;
- Development Zone Plan LCS052 DZ-01. October 2020. Low Carbon;
- Site Layout Plan External LCS052 PLE-01. October 202. Low Carbon;
- Site Location Plan LCS052-SP01. April 2023. Low Carbon;
- Shadow Habitats Regulations Report. November 2023. EDP;
- Security Fence and CCTV Standard Detail LCS-SD-04.1. February 2023. Low Carbon
- Arboricultral Report. November 2023. Tree Heritage

1. Protected Species and Habitats

The current arable farmland supports a number of breeding and overwintering bird species including lapwing and skylark and the proposals will result in the loss of suitable nesting habitat. Although hedgerows are to be retained and enhanced and a neutral grassland margin created, the loss of open arable farmland will result in the loss of skylark nesting opportunities. The Ecological Appraisal recommends a Skylark Mitigation Strategy which should be designed into the scheme. We advise that this mitigation scheme is submitted prior to determination, the details of which should be included on technical drawings.

Ten trees with suitable features for roosting bats were identified on site. The Arboricultural Report recommends the removal of a number of trees and/or crown reduction. No additional surveys of the trees to be removed in relation to bats have been undertaken. In addition, no transect surveys to determine bat use of the site have been completed to support the application. Records for Annex II bat species exist within close proximity to the south. Bats have been shown to be impacted by solar arrays and it is therefore recommended that bat transect surveys to determine bat use of the site are undertaken. Both tree and transect surveys should be undertaken in line with Best Practice Survey Guidelines.

We welcome the proposals to use largely existing access points, and to create habitat buffers alongside the hedgerows. The proposed buffer zone alongside the woodland belt is also welcomed. However, these distances are not included on any technical drawings and so it is currently unclear if these buffers can be achieved throughout the site. Moreover, it is not clear to what extent access will be required along these buffer areas for management and/or access or what the total predicted extent of habitat lost will be (Section 4.17 Ecological Appraisal).
Additional information to determine habitat loss and also possible creation is therefore required to enable a full assessment. The BNG metric should also be altered as appropriate.

Additional information to include the location of the connection grid route is also required. The proposed grid connection route is not considered within the ecological assessment or BNG calculations. Additional information is required to ensure the cable route is included in its entirety so that a full ecological assessment can be made.

A number of Reasonable Avoidance Measures have been included within the Ecological Appraisal Report for badger, breeding birds and reptile. These integrated mitigation measures are welcomed.

Further mitigation is proposed in the form of bird boxes, the number and detail of which have not been included. This information should also be included on technical drawings.

Hampshire River Avon Catchment
This development falls within the catchment of the River Avon SAC and has potential to cause adverse effects alone or in combination with other developments through discharge of phosphorus in wastewater. A test of likely significance has been carried out by the relevant Competent Authority (Wiltshire Council) as required by Regulation 63 Conservation of Habitats and Species Regulations 2017 (as amended). This concluded that as the proposals are for the construction and operation of a solar photovoltaic farm there is no mechanism for adverse effect and operational impacts would be de-minimis.

New Forest Protected Sites 13.8km Recreation Zone of Influence
A test of likely significance has been carried out by the relevant Competent Authority (Wiltshire Council) as required by Regulation 63 Conservation of Habitats and Species (Amendment) (EU Exit) Regulations 2019. This concluded that given the scale and nature of the development, there is no mechanism for adverse effect and operational impacts would be de-minimus. **The HRA has concluded that the application is not likely to have significant impacts on the SAC and Appropriate Assessment is not required.**

2. Biodiversity Net Gain

We welcome the submission of the BNG Assessment included with the Ecological Appraisal. From the information submitted it appears that net gain has been met through the inclusion of new hedgerows, together with the creation and enhancement of grassland meadows.

However, the application should be supported by the submission of the unlocked Biodiversity Metric calculation spreadsheet together with the condition assessment sheets and detailed maps showing clearly the specific areas of land identified in each row of the calculation tool for both the baseline and operational phases of development. From the Landscape Plan submitted, it is unclear if the proposed objectives of hedgerow planting, fencing and wildflower margins are possible within the areas proposed. Moreover, the extent of habitat removal/loss is currently unknown and the grid connection route has not been included.

3. HMMP

A number of proposals have been recommended to enhance biodiversity on site through the BNG Assessment but no additional information as to how these measures will be achieved has been submitted to support the application. The published guidance: Solar PV Farms and Ecology; Developer Advice Note July 2021, advises that a LEMP/HMMP is provided to support the application.

SolarPVFarmEcologyAdviceNoteJuly2021.pdf (wiltshire.gov.uk)

Details of how habitats will be created and managed during the lifetime of the proposal will be required to demonstrate how BNG can be achieved and delivered. We therefore advise the following is included to support the application;

- The long term objectives and targets for the site;
- A mechanism for monitoring success and of the management prescriptions, incorporating review and necessary adaptive management in order to attain targets.
- Details of the legal and funding mechanism(s) by which long-term implementation of the plan will be secured.
- The HMMP should also cover the period of decommissioning at the end of the operational phase of the development.

As suggested within the Ecological Appraisal, the cessation of intensive agriculture will be of benefit to biodiversity by increasing invertebrate abundance. The HMMP should also reflect this with minimal use of chemical/herbicide sprays.

The Ecological reports submitted with this application are welcomed. However, additional information is required in line with published guidance to provide additional information in relation to mitigation and enhancement measures proposed, to ensure the continued functionality of the area for biodiversity.

Final sign off – all matters addressed:

Ecologist Jenna Buss	Date

Appendix EDP 2
Development Zone Plan

A1

This drawing is the copyright of Low Carbon and must not be reproduced in whole or in part or used in any manner without their written permission.

Scaled dimensions must not be taken from this drawing. All dimensions are to be confirmed on site prior to commencement of work

Revisions:

Revition	Date	Revition Notes	Drawn	Inspected
01	13.10.20	First Issue	GP	IL
02	27.03.23	Layout Amendment	AK	NG
03	24.07.23	Layout Amendment	JB	NG
04	21.11.23	Layout Amendment	GM	ML
05	21.11.23	Layout Amendment	MB	ML
06	13.03.24	Layout Amendment	JC	ML

LEGEND:

- PROPOSED SITE
- DEVELOPMENT ZONES
- EXISTING VEGETATION

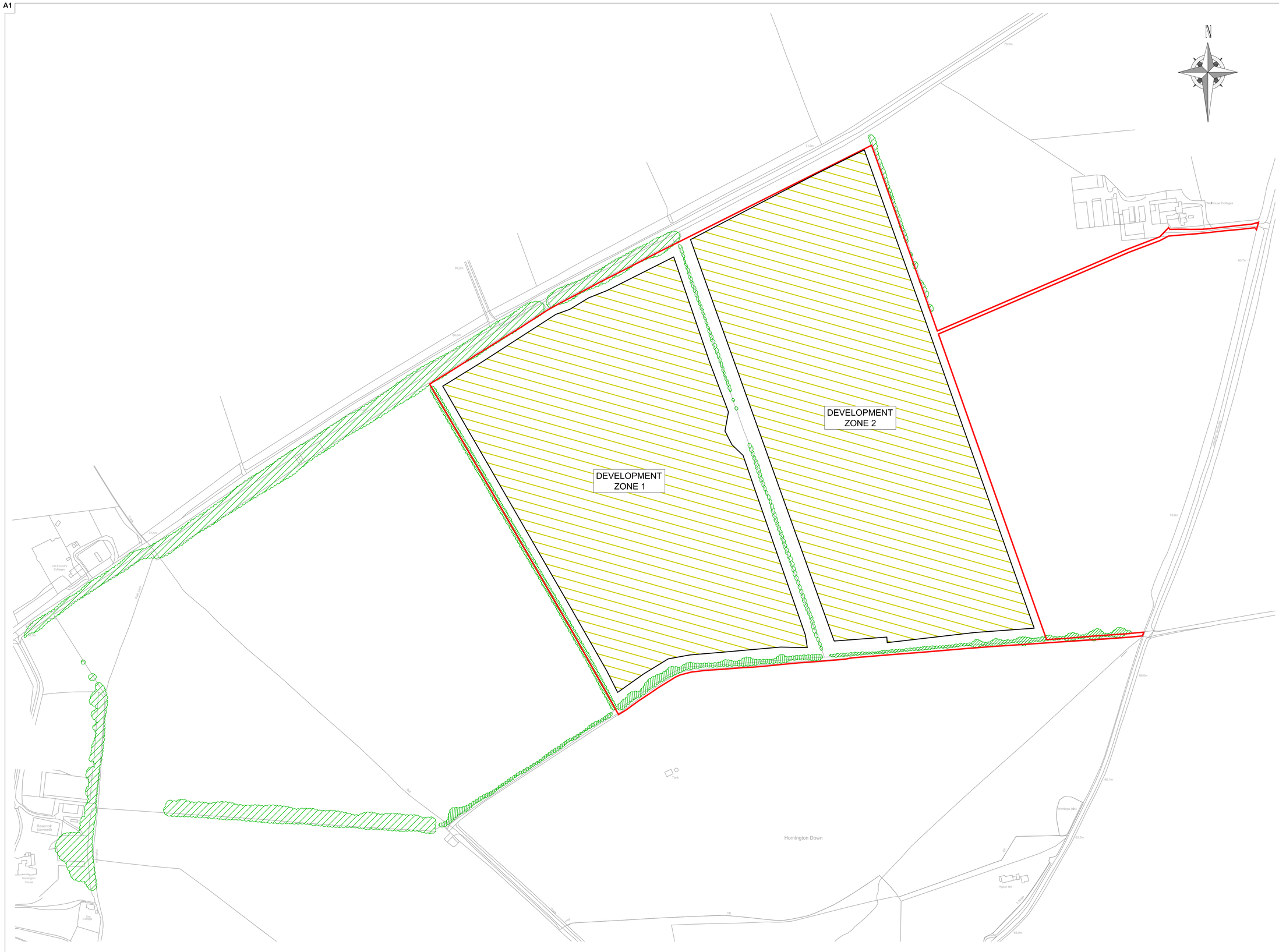

1 BEECH TREE SOLAR FARM DEVELOPMENT ZONE PLAN

Scale: 1:2500@A1

0 50 100 150 200 250m

SCALE 1:2500

Status: **FOR PLANNING**

Project: **Beech Tree Solar Farm, Salisbury**

low carbon
powering tomorrow

13 Berkeley Street, London W1J 8DU
Tel: +44(0)207 4090700
enquiries@lowcarbon.com www.lowcarbon.com

Drawing Title: **Beech Tree Solar Farm Developmet Zone Plan**

Drawn:	Checked:	First Issued:
GP	IL	13.10.2020

Project Code: **LCS052** Drawing Number: **DZ-01**

Sheet Size:	Scale:	Revision:
A1	**1:2500**	**06**

Appendix EDP 3
Indicative Site Layout Plan

A1

This drawing is the copyright of Low Carbon and must not be reproduced in whole or in part or used in any manner without their written permission.

Scaled dimensions must not be taken from this drawing. All dimensions are to be confirmed on site prior to commencement of work

Revisions:

Revision	Date	Revision Notes	Drawn	Inspected
01	13.10.20	First Issue	GP	IL
02	27.03.23	Layout Amendment	AK	NG
03	27.04.23	Layout Amendment	AK	AD
04	13.11.23	Site Revised	EM	AD
05	13.11.23	Site Layout Amended	EM	AD
06	20.11.23	Fence Line Amended	MR	ML
07	30.11.23	Site Revised	MR	ML
08	30.11.23	Site Revised	MR	ML
09	13.03.24	Site Revised	JC	ML

LEGEND:

- PROPOSED SITE
- DNO ACCESS
- CONSTRUCTION AND MAINTENANCE ACCESS
- SITE ACCESS
- PERIMETER FENCELINE
- EXISTING O/H 33kV CABLE
- EXISTING O/H 11kV CABLE
- EXISTING O/H LV CABLE
- FOOTPATH
- BYWAY OPEN TO ALL TRAFFIC
- EXISTING VEGETATION
- PROTECTED TREES

SITE INFRASTRUCTURE:

- DNO SUBSTATION
- SOLAR PANELS MODULES
- CUSTOMER SUBSTATION
- SPARE PARTS CONTAINER
- SECURITY GATE
- CCTV CAMERA
- INVERTER
- O & M CONTAINER

Inter-row Spacing = 3.2m				
Overall Panel Counts and Acreage				
Field Number	Acres	Useful Acres	Panel count	Megawatts
1	47.97	41.34	40012	17.61
2	50.34	43.99	42312	18.62
TOTAL	98.311	85.330	82324	36.22

Status:
FOR PLANNING

Project:
Beech Tree Solar Farm, Salisbury

low carbon
powering tomorrow

13 Berkeley Street, London W1J 8DU
Tel: +44(0)207 4090700
enquiries@lowcarbon.com www.lowcarbon.com

Drawing Title:
Beech Tree Solar Farm Indicative Site Layout Plan

Drawn:	Checked:	First Issued:
GP	IL	13.10.2020

Project Code:	Drawing Number:
LCS052	PLI-01

Sheet Size:	Scale:	Revision:
A1	1:2500	09

1 BEECH TREE SOLAR FARM INDICATIVE SITE LAYOUT PLAN

Scale: 1:2500@A1

0 50 100 150 200 250m

SCALE 1:2500

FOR INTERNAL ONLY

Appendix EDP 4
Arboricultural Report
(Tree Heritage, March 2024)

ARBORICULTURAL REPORT

Client: Low Carbon

Site: Beech Tree Solar Farm
Salisbury

Date: 07 March 2024

Ref.: THL-R23-110-2

CONTENTS

1.0 Introduction

2.0 Limitations of report

3.0 Method

4.0 Trees and Construction: General overview

5.0 Protection of trees that are retained

6.0 Arboricultural methods

7.0 Wildlife: timing of operations

8.0 Planning considerations

9.0 Arboricultural Impact Assessment

10.0 Cascade Chart for Tree Quality Assessment: Table 1 BS 5837:2012

11.0 Appendix A: Tree Survey Schedule

12.0 Appendix B: Tree Protection Barriers

13.0 Appendix C: Plans
- 13.1 Tree Constraints Plan
- 13.2 Arboricultural Impact Assessment Plan
- 13.3 Tree Protection Plan

1.0 Introduction

1.1 The purpose of this report is to be an aid to the design of the layout of the site. It identifies the better trees and specifies necessary protective measures that are required to keep the trees within the development. It may also give recommendations for remedial work that may be desirable to keep or improve the quality of the trees.

1.2 The survey complies with British Standard 5837:2012 *Trees in relation to design, demolition and construction – Recommendations*. All significant trees on the site have been inspected including any that may be on the boundary or on adjacent land that may be affected by any development. Included in the schedule of trees are the Root Protections Areas (RPAs) which are designed to give the minimum functionally rooting area to ensure the healthy survival of the retained trees on site. The relevant distance from each tree from which construction work should be excluded by the erection of a Protective Barrier is also listed.

1.3 The site visit was on 16 May 2023. Surveyor: Ben Williams. The weather conditions: Clear and bright.

2.0 Limitations of report

2.1 The trees were inspected from ground level only and no invasive tools were used.

2.2 This report is valid for a period of 2 years as part of the planning application process. Due to the nature of trees the condition may change rapidly and therefore the safety of the trees cannot be guaranteed for the same period.

2.3 Trees may affect buildings by indirect influence of their roots on the substrate on which structures are built and by direct action on foundations, drains and other underground services. This report does not attempt to address these issues.

2.4 Trees are dynamic structures that can change rapidly and can never be guaranteed 100% safe: even if they were deemed safe on the day of the inspection, they can sometimes suffer damage in adverse weather conditions. All trees should be inspected following any bad weather.

3.0 Method

3.1 The survey was undertaken from ground level and includes all individual significant trees shown in position and numbered on the site plan. Some trees may be surveyed together and put in numbered groups e.g. G1, or woodlands e.g. W1. Hedges will also be listed e.g. H1.
The following information is collected and given in a schedule.

- Number
- Tree Species (Common Name)
- Height in metres
- Stem diameter at 1.5 metre above ground level in millimetres.
- Crown Spread at compass points NSEW in metres.
- Crown clearance (height of lowest branch above ground) in metres.
- First significant branch height (in metres) and direction (NSEW).
- Age Class (Young, Middle-aged, Mature, Over mature and Veteran)
- Physiological Condition (Good, Fair, Poor or Dead). This is an overall assessment of the health of the tree based on leaf size, colour, density, annual growth increments and die-back or dead wood.
- Structural Condition (comments on decay, cavities, disease and other defects and issues that will affect its suitability for retention).
- Recommendations (These are based on the previous two categories and may include pruning or removal amongst other recommendations).
- Estimated Remaining Contribution (in years <10, 10+, 20+, 40+)
- Category Grading:

  U= Low valued tree (may be unsuitable for retention due to its poor condition or less than 10 years contribution).

  A= High quality tree of good form with at least 40 years contribution.

  B= Moderate quality tree with 20>40 years contribution.

  C= Low quality tree (usually of poor form or condition). Also, trees of less the 150mm stem diameter (these may be considered for relocation). Category C trees should not be considered as a planning constraint.

  Subcategory:

  1= mainly Arboricultural Merit

  2= mainly Landscape Merit

  3= mainly Cultural or Conservation Merit

4.0 Trees and Construction: General overview

4.1 Trees are large dynamic organisms that have basic requirements to survive. The obvious part of the tree is the trunks and branches with the leaves that are essential for survival and these are easily damaged by machines etc. This damage though is easily avoided and obvious when it occurs. They have roots that anchor the tree into the ground but also take up moisture and oxygen as well as nutrients from the soil. Most tree roots are in the upper 0.5 metres of the soil and can extend well beyond the extent of the trees leafy canopy. Roots are easily damaged during any construction process although sometimes the immediate effect is not obvious. The main threats from construction work come from:

a) Compaction of the soil prevents gaseous exchange and water drainage.
b) Roots being severed or crushed.
c) Drainage being affected by alteration of levels and installation of trenches for services.
d) Physical damage to branches and trunks.
e) Poisoning of trees with contamination from fuel and oil leaks from machinery, run off from concrete mixers or other toxic materials used during construction.

The main consequences of the above in terms of damage are:

i) Compaction kills roots by preventing oxygen and water take-up.
ii) Severance can lead to pathogenic fungi invading the tree and in the worst cases, it can also lead to instability.
iii) Loss of vitality caused by the above can dramatically affect the life span of the tree.
iv) Damage to the crown can also lead to disease and instability in the worst cases.

5.0 Protection of the trees that are retained

5.1 BS 5837:2012 is intended to give recommendations to protect the trees during development and ensure their survival following the demolition or construction work. To achieve this there are two main considerations. The first is to protect the roots of the trees and the second to protect the upper parts of the trees, the trunk and branches.

5.2 The main tool to achieve the above is to create “Construction Exclusion Zones” (CEZ) around the trees. These are based on the “Root Protection Area” or RPA as calculated in BS 5837:2012. The RPAs for all the trees are included in the survey schedule. The RPA may be adjusted to consider existing ground constraints such as roads, buildings or walls. This will be done based on the surveyors’ experience and qualification on a tree by tree basis.

5.3 To achieve an effective “Construction Exclusion Zone” (CEZ) it is necessary to erect a protective barrier along the edge of the RPA’s. The details of this fencing are shown in Figure 2 or 3, which is included as an appendix (B) to this report. The barrier should be erected a minimum distance from each tree, this minimum distance is provided as a radius in the Survey Schedule and shown on the plan. It is essential that this barrier is well anchored into the ground to prevent it being moved. It is acceptable to use “Herras” fencing in concrete or rubber feet and appropriately back braced in areas where site circumstances and the associated risk of damaging incursion into the RPA are low.

5.4 The Tree Protective Fencing should be installed before any construction work takes place. This includes demolition, site clearance and drainage work.

5.5 Notices should be fixed to the fencing warning personnel not to enter. They should read “CONSTRUCTION EXCLUSION ZONE – NO ACCESS”. An example of this is attached in appendix (B).

5.6 In some circumstances, and only with agreement from the LPA, it may be necessary to work within the RPA. In these circumstances the barrier may need to be realigned and ground protection used even for access on foot. If vehicular access is required, then this will have to be specifically designed to prevent compaction and agreed in writing.

5.7 If the LPA agree to work within the RPA, then any excavation work would have to be done by hand and usually supervised by the Arboriculturalist. Drives or access roads will also require a specific Method Statement and include “No-Dig” construction methods.

5.8 Some operations such as the use of cranes for construction or demolition will need to be carefully organised and supervised to avoid accidental damage to the branches and stems of the retained trees. It may be advisable where damage is inevitable to carry out facilitation pruning to avoid initial conflict. This would have to be agreed by the Arboriculturalist and the LPA.

5.9 Trees should not be used to support notices and under no circumstances should nails, screws or bolts be driven into the trees. Likewise, trees should not be used to support cables or lights.

5.10 Care should be taken to avoid the discharge of any material that could contaminate the soil within 15 metres of any tree. This would include washings from cement mixers, fuel or oil storage etc. This distance may need to be extended if the ground slopes towards the tree.

6.0 Arboricultural Methods

6.1 The Arboriculturalist or the Local Authority Tree Officer should be consulted if there are any unforeseen issues in relation to any tree on site, including any unexpected work within the Root Protection Areas.

6.2 All tree work should be carried out by skilled professionals, and it is recommended that contractors are selected from the Approved List of Arboricultural Association Contractors. This can be obtained from www.trees.org.uk

6.3 All tree work should be carried out to the latest standards based on BS 3998: 2010 ‘Recommendations for Tree Work’.

7.0 Wildlife and Timing of Operations

7.1 Many animals including bats and birds are given special protection under the Wildlife and Countryside Act 1981(as amended) and the Countryside and Rights of Way Act 2001 amongst other legislation.

7.2 **Bats**. It is an offence to "intentionally or recklessly disturb a bat" or "damage, destroy or block the access to the resting place of any bat". An assessment of trees on the site for "suitability for bats" is an essential part of the pre-planning stage. If bats are found or even reported to have used the trees for roosts, then it is essential that a specialist in this field is contacted for advice. Natural England should be contacted on 0300 060 3900 or through www.naturalengland.org.uk for details of suitable specialists. It may be that a European Protected Species Habitat Regulations Licence is required before work can continue. Following advice, it is usual that work to trees with potential for bat roosts is best done from late August to early October. March through to April is also suitable but there may be conflict with nesting birds. (see below)

7.3 **Birds**. It is an offence to disturb, injure or kill any bird whilst it is at or building a nest. This includes damage to or removal of the actual nest whilst it is in use or being built. Tree works that could lead to the above should therefore be avoided during the months of March through until August.

7.4 To avoid problems with either, it would be advisable to programme all necessary site clearance work and tree pruning from late August to the early October**.**

8.0 Planning Considerations

8.1 Full planning consent that includes any proposed tree works usually overrides the requirement to get specific permission, even for trees that are within a Conservation Area or protected by a Tree Preservation Order.

8.2 If work is to be carried out prior to planning consent being sought, then it may be necessary to apply for permission separately. In a Conservation Area it is a requirement to give Six Weeks Written Notice of any intended works. In the case of a TPO an application is required to the LPA on a 1APP form; in this case it may take 8-10 weeks before permission is given. It should be noted that permission is not required from the LPA to remove "Dead or Dangerous" trees although it is always best to inform the LPA of your intentions and supply suitable evidence to support your actions.

9.0 Arboricultural Impact Assessment

9.1 A total of 19 individual trees, 4 groups of trees, and 11 hedges were included in the original survey. All trees, groups, and hedges are listed in the survey schedule and shown on plans THL-1156-1 attached to this report.

9.2 Trees T1-T4, groups G2-G4 and hedges H3-H6 were originally surveyed and included in the appended tree survey. Subject to application site boundary refinements, these trees are no longer within the application site boundary. As such, these trees are not included in the survey schedule, or the plans attached to this report.

9.3 The proposed development is for a solar farm as shown on plan THL-1156-4.

9.4 The layout of the solar panels has been designed to avoid the trees. A buffer will be maintained around all trees, groups, and hedges to avoid the RPA's. As a result, no tree removal is required for the solar panels.

9.5 The construction access will be from northeast of the site.

9.6 The operational and DNO access will be from the south of the site using the existing entrance. To improve the entrance and visibility splay a small section of hedge H7 will be removed.

9.7 The internal maintenance access roads, security fence and the cables has been designed to avoid the trees. A buffer will be maintained around all trees, groups, and hedges to avoid the RPA's. As a result, no additional tree or hedge removal is required.

9.8 All retained trees will require protection during the construction work to make sure that they are not damaged. This can be achieved by creating a Construction Exclusion Zone (CEZ), using barriers to exclude vehicles, personnel and materials, details of this are found in section 5 of this report.

9.9 The suggested position of the Tree Protection Barriers is shown on plan THL-1156-5 but should be discussed on site with the agreement of the LPA Tree Officer. It is essential that they are erected prior to any works commencing on site and remain in situ until completion of the works.

9.10 The new perimeter fence will act as suitable tree and hedge protection if it is erected prior to any other work being carried out on site, this would mean additional tree protection barriers are not necessary.

Tree Heritage Ltd

Ben Williams

Ben Williams
BSc (Hons) Arb. M.Arbor.A

07/03/2024

Table 1 Cascade chart for tree quality assessment

Category and definition	Criteria (including subcategories where appropriate)			Identification on plan
Trees unsuitable for retention (see Note)				
Category U Those in such a condition that they cannot realistically be retained as living trees in the context of the current land use for longer than 10 years	• Trees that have a serious, irremediable, structural defect, such that their early loss is expected due to collapse, including those that will become unviable after removal of other category U trees (e.g. where, for whatever reason, the loss of companion shelter cannot be mitigated by pruning) • Trees that are dead or are showing signs of significant, immediate, and irreversible overall decline • Trees infected with pathogens of significance to the health and/or safety of other trees nearby, or very low quality trees suppressing adjacent trees of better quality *NOTE Category U trees can have existing or potential conservation value which it might be desirable to preserve; see **4.5.7**.*			Red
	1 Mainly arboricultural qualities	**2 Mainly landscape qualities**	**3 Mainly cultural values, including conservation**	
Trees to be considered for retention				
Category A **Trees of high quality** with an estimated remaining life expectancy of at least 40 years	Trees that are particularly good examples of their species, especially if rare or unusual; or those that are essential components of groups or formal or semi-formal arboricultural features (e.g. the dominant and/or principal trees within an avenue)	Trees, groups or woodlands of particular visual importance as arboricultural and/or landscape features	Trees, groups or woodlands of significant conservation, historical, commemorative or other value (e.g. veteran trees or wood-pasture)	Light Green
Category B **Trees of moderate quality** with an estimated remaining life expectancy of at least 20 years	Trees that might be included in category A, but are downgraded because of impaired condition (e.g. presence of significant though remediable defects, including unsympathetic past management and storm damage), such that they are unlikely to be suitable for retention for beyond 40 years; or trees lacking the special quality necessary to merit the category A designation	Trees present in numbers, usually growing as groups or woodlands, such that they attract a higher collective rating than they might as individuals; or trees occurring as collectives but situated so as to make little visual contribution to the wider locality	Trees with material conservation or other cultural value	Mid Blue
Category C **Trees of low quality** with an estimated remaining life expectancy of at least 10 years, or young trees with a stem diameter below 150 mm	Unremarkable trees of very limited merit or such impaired condition that they do not qualify in higher categories	Trees present in groups or woodlands, but without this conferring on them significantly greater collective landscape value; and/or trees offering low or only temporary/transient landscape benefits	Trees with no material conservation or other cultural value	Grey

Tree Heritage Ltd, Unit 1 Sneyd Mill, Sneyd St, Leek, Staffs, ST13 5HP
T: 01538 384019 E: info@treeheritage.co.uk

APPENDIX A: TREE SURVEY SCHEDULE

KEY:

Measurements	Life Stage	Physiological Condition	Category Grading	Symbols
Height - *Metres* Stem Diameter - *Millimetres at 1.5m above ground level* Branch Spread - *Metres (North, South, East and West)* Crown Clearance - *Metres* RPA Radius - *Metres* Estimated Remaining Contribution - *Years* FSB - First Significant Branch - *Metres*	Y - *Young* SM - *Semi-Mature* EM - *Early Mature* M - *Mature* OM - *Over-Mature* V - *Veteran*	G - *Good* F - *Fair* P - *Poor* D - *Dead*	A - *High (green)* B - *Moderate (blue)* C - *Low (grey)* *U - Poor/Trees for removal (red)* **Sub-Categories:** 1 - *Mainly Arboricultural value* 2 - *Mainly Landscape value* 3 - *Mainly Cultural value*	< - *Less than* ~ - *Approximately* > - *Greater than*
RPA - *Root protection area (equivalent to a circle with a radius 12x the stem diameter measured at 1.5m above ground level)*				

Site: Beech Tree, Salisbury
Surveyed by: Ben Williams BSc (Hons) Arb. M.Arbor.A
Date: 16/05/2023

Tree Heritage Ltd, Unit 1 Sneyd Mill, Sneyd St, Leek, Staffs, ST13 5HP
T: 01538 384019 E: info@treeheritage.co.uk

Tree Ref.	Species	Height	Stem Diameter	Branch Spread				Crown Clearance	FSB Height + Direction	Life Stage	Phys. Condition	Structural Condition	Recommendations	Estimated Remaining Contribution	Category Grading	RPA Radius
				N	S	E	W									
T5	Fraxinus excelsior (Ash)	8	500	4	4	4	5	4	4(N)	M	Poor	Low vitality. Declining. Ivy on stem. Dieback in crown. Major deadwood in crown.	No work required.	<10	U	6
T6	Fraxinus excelsior (Ash)	12	500	5	5	5	5	4	4(N)	M	Fair	Ivy on stem. Major deadwood in crown.	No work required.	10+	C1	6
T7	Fraxinus excelsior (Ash)	12	500	5	5	5	5	4	4(N)	M	Fair	Ivy on stem. Dieback in crown. Major deadwood in crown.	No work required.	10+	C1	6
T8	Fraxinus excelsior (Ash)	12	500	5	5	5	5	4	4(N)	M	Fair	Ivy on stem. Major deadwood in crown.	No work required.	10+	C1	6
T9	Fraxinus excelsior (Ash)	12	500	5	5	5	5	4	4(N)	M	Fair	Ivy on stem. Major deadwood in crown.	No work required.	10+	C1	6
T10	Fraxinus excelsior (Ash)	12	500	5	5	5	5	4	4(N)	M	Fair	Ivy on stem. Dieback in crown. Major deadwood in crown.	No work required.	10+	C1	6
T11	Fraxinus excelsior (Ash)	12	500	5	5	5	5	4	4(N)	M	Fair	Ivy on stem. Major deadwood in crown.	No work required.	10+	C1	6
T12	Fraxinus excelsior (Ash)	12	500	5	5	5	5	4	4(N)	M	Fair	Ivy on stem. Major deadwood in crown.	No work required.	10+	C1	6

Site: Beech Tree, Salisbury
Surveyed by: Ben Williams BSc (Hons) Arb. M.Arbor.A
Date: 16/05/2023

Tree Heritage Ltd, Unit 1 Sneyd Mill, Sneyd St, Leek, Staffs, ST13 5HP
T: 01538 384019 E: info@treeheritage.co.uk

Tree Ref.	Species	Height	Stem Diameter	Branch Spread				Crown Clearance	FSB Height + Direction	Life Stage	Phys. Condition	Structural Condition	Recommendations	Estimated Remaining Contribution	Category Grading	RPA Radius
				N	S	E	W									
T13	Fraxinus excelsior (Ash)	12	500	5	5	5	5	4	4(N)	M	Fair	Ivy on stem. Major deadwood in crown.	No work required.	10+	C1	6
T14	Fraxinus excelsior (Ash)	12	500	5	5	5	5	4	4(N)	M	Fair	Ivy on stem. Major deadwood in crown.	No work required.	10+	C1	6
T15	Fraxinus excelsior (Ash)	12	500	5	5	5	5	4	4(N)	M	Fair	Ivy on stem. Major deadwood in crown.	No work required.	10+	C1	6
T16	Fraxinus excelsior (Ash)	12	500	5	5	5	5	4	4(N)	M	Fair	Ivy on stem. Major deadwood in crown.	No work required.	10+	C1	6
T17	Fraxinus excelsior (Ash)	12	500	6	6	6	6	4	4(N)	M	Poor	Declining. Ivy on stem. Dieback in crown. Major deadwood in crown.	Remove major deadwood over site.	<10	U	6
T18	Fraxinus excelsior (Ash)	12	500	4	4	4	4	4	4(N)	M	Fair	Declining. Ivy on stem. Dieback in crown. Major deadwood in crown.	Remove major deadwood over site.	<10	U	6
T19	Fagus sylvatica (Beech)	17	750	9	9	9	9	3	5(E)	M	Good	Ivy on stem. Major deadwood in crown.	No work required.	40+	A1	9
G1	Fagus sylvatica (Beech),Fagus sylvatica 'Purpurea' (Copper Beech),Pinus sylvestris (Scots Pine)	16	500	6	6	6	6	6	5(S)	M	Good	Part of linear group.	No work required.	40+	A1	6

Site: Beech Tree, Salisbury
Surveyed by: Ben Williams BSc (Hons) Arb. M.Arbor.A
Date: 16/05/2023

Tree Heritage Ltd, Unit 1 Sneyd Mill, Sneyd St, Leek, Staffs, ST13 5HP
T: 01538 384019 E: info@treeheritage.co.uk

Tree Ref.	Species	Height	Stem Diameter	Branch Spread				Crown Clearance	FSB Height + Direction	Life Stage	Phys. Condition	Structural Condition	Recommendations	Estimated Remaining Contribution	Category Grading	RPA Radius
				N	S	E	W									
H1	Fagus sylvatica (Beech),Crataegus monogyna (Hawthorn),Ilex aquifolium (Holly)	3	200	2	2	2	2	0.5	0.5(S)	M	Good		No work required.	20+	B1	2.4
H2	Crataegus monogyna (Hawthorn),Acer campestre (Field Maple),Corylus avellana (Hazel)	2.5	150	1.5	1.5	1.5	1.5	0.5	0.5(E)	M	Good		No work required.	10+	C1	1.8
H7	Crataegus monogyna (Hawthorn),Acer campestre (Field Maple),Sambucus nigra (Elder),Fraxinus excelsior (Ash)	2.5	150	1.5	1.5	1.5	1.5	0.5	0.5(E)	M	Good		No work required.	10+	C1	1.8
H8	Crataegus monogyna (Hawthorn),Acer campestre (Field Maple),Sambucus nigra (Elder),Fraxinus excelsior (Ash)	2.5	150	2.5	2.5	2.5	2.5	0.5	0.5(E)	M	Good		No work required.	20+	B1	1.8
H9	Crataegus monogyna (Hawthorn),Acer campestre (Field Maple),Sambucus nigra (Elder),Fraxinus excelsior (Ash)	2.5	150	1.5	1.5	1.5	1.5	0.5	0.5(E)	M	Good		No work required.	10+	C1	1.8
H10	Crataegus monogyna (Hawthorn),Sambucus nigra (Elder)	2.5	150	1.5	1.5	1.5	1.5	0.5	0.5(E)	M	Good	Broken hedge line.	No work required.	10+	C1	1.8

Site: Beech Tree, Salisbury
Surveyed by: Ben Williams BSc (Hons) Arb. M.Arbor.A
Date: 16/05/2023

Tree Heritage Ltd, Unit 1 Sneyd Mill, Sneyd St, Leek, Staffs, ST13 5HP
T: 01538 384019 E: info@treeheritage.co.uk

Tree Ref.	Species	Height	Stem Diameter	Branch Spread				Crown Clearance	FSB Height + Direction	Life Stage	Phys. Condition	Structural Condition	Recommendations	Estimated Remaining Contribution	Category Grading	RPA Radius
				N	S	E	W									
H11	Crataegus monogyna (Hawthorn),Sambucus nigra (Elder)	2.5	150	1.5	1.5	1.5	1.5	0.5	0.5(E)	M	Good	Broken hedge line.	No work required.	10+	C1	1.8

Appendix B i

Figure 2 – Default specification for protective barrier

Figure 2 **Default specification for protective barrier**

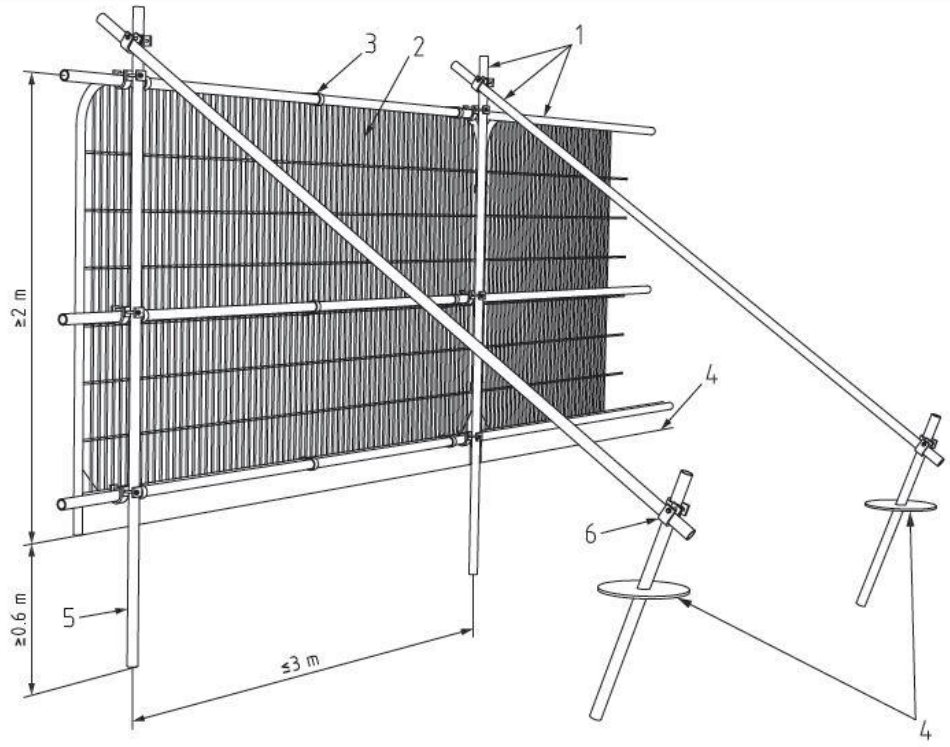

Key

1 Standard scaffold poles
2 Heavy gauge 2 m tall galvanized tube and welded mesh infill panels
3 Panels secured to uprights and cross-members with wire ties
4 Ground level
5 Uprights driven into the ground until secure (minimum depth 0.6 m)
6 Standard scaffold clamps



PROTECTIVE FENCING. THIS FENCING MUST BE MAINTAINED IN ACCORDANCE WITH THE APPROVED PLANS AND DRAWINGS FOR THIS DEVELOPMENT.



TREE PROTECTION AREA
KEEP OUT !

TREES ENCLOSED BY THIS FENCE ARE PROTECTED BY PLANNING CONDITIONS

ANY INCURSION INTO THE PROTECTED AREA MUST BE WITH THE WRITTEN PERMISSION OF THE LOCAL PLANNING AUTHORITY

1:2500

50m 0 50m 100m 150m 200m 250m

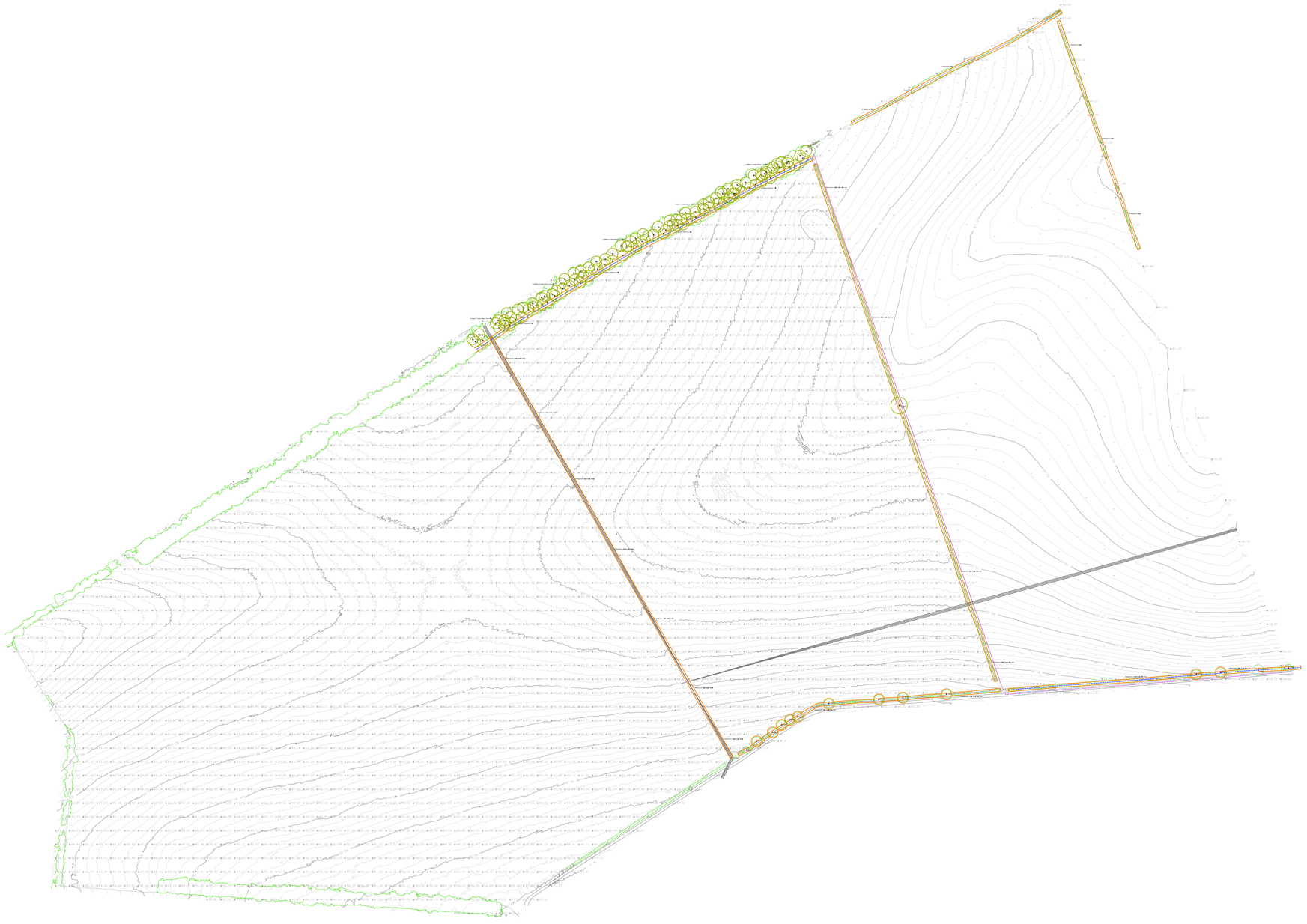

Notes:

1. Contractors are advised to check all dimensions against the tree schedule. Tree canopies are symbolic only and are representative of the average spread; this may not represent the true outline. Note that the tree stem may not sit centrally to canopy. Tree stems are symbolic only and are representative of the tree category; this does not represent the stem diameter - see schedule for details.
2. The original of this drawing was produced in colour - a monochrome copy should not be relied upon.

Rev:	Date:	Status/Amendments:	By:

Key:

- Category A Tree / Group
- Category B Tree / Group
- Category C Tree / Group
- Category U Tree / Group
- Branch Spread
- Tree / Hedge to be Removed
- Root Protection Area (RPA)
- First Significant Branch Direction
- Tree Protection Barrier
- Special Measures
- Tree Shadow

GROWING SINCE ● 1982

TREE HERITAGE

Tree Heritage Ltd, Unit 1 Sneyd Mill, Sneyd Street, Leek, Staffordshire, ST13 5HP

Telephone: 01538 384019

treeheritage.co.uk ● info@treeheritage.co.uk

Client:

Low Carbon

Project:

Beech Tree Solar Farm, Salisbury

Drawing Title:

Tree Constraints Plan

Scale:	Paper Size:
1:2500	A1
Drawing Number:	Date Created:
THL-1156-1	07/03/2024

1:2500

50m 0 50m 100m 150m 200m 250m

N

Notes:

1. Contractors are advised to check all dimensions against the tree schedule. Tree canopies are symbolic only and are representative of the average spread; this may not represent the true outline. Note that the tree stem may not sit centrally to canopy. Tree stems are symbolic only and are representative of the tree category; this does not represent the stem diameter - see schedule for details.
2. The original of this drawing was produced in colour - a monochrome copy should not be relied upon.

Rev:	Date:	Status/Amendments:	By:

Key:

- Category A Tree / Group
- Category B Tree / Group
- Category C Tree / Group
- Category U Tree / Group
- Branch Spread
- Tree / Hedge to be Removed
- Root Protection Area (RPA)
- First Significant Branch Direction
- Tree Protection Barrier
- Special Measures
- Tree Shadow

GROWING SINCE ❦ 1982

TREE HERITAGE

Tree Heritage Ltd, Unit 1 Sneyd Mill, Sneyd Street, Leek, Staffordshire, ST13 5HP

Telephone: 01538 384019

treeheritage.co.uk ❦ info@treeheritage.co.uk

Client:

Low Carbon

Project:

Beech Tree Solar Farm, Salisbury

Drawing Title:

Arboricultural Impact Assessment

Scale:	Paper Size:
1:2500	A1
Drawing Number:	Date Created:
THL-1156-4	07/03/2024

Figure 2 **Default specification for protective barrier**

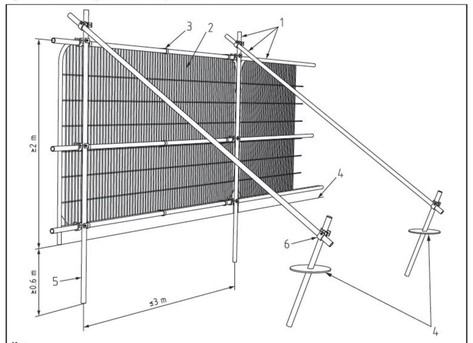

Key

1 Standard scaffold poles
2 Heavy gauge 2 m tall galvanized tube and welded mesh infill panels
3 Panels secured to uprights and cross-members with wire ties
4 Ground level
5 Uprights driven into the ground until secure (minimum depth 0.6 m)
6 Standard scaffold clamps

1:2500
50m 0 50m 100m 150m 200m 250m

PERIMETER FENCELINE TO BE ERECTED BEFORE ALL OTHER WORKS START ON SITE. THIS WILL THEN BE USED AS TREE PROTECTION FENCING.

PERIMETER FENCELINE TO BE ERECTED BEFORE ALL OTHER WORKS START ON SITE. THIS WILL THEN BE USED AS TREE PROTECTION FENCING.

Tree Ref.	RPA Radius (Metres)
T5	6
T6	6
T7	6
T8	6
T9	6
T10	6
T11	6
T12	6
T13	6
T14	6
T15	6
T16	6
T17	6
T18	6
T19	9
G1	6
H1	2.4
H2	1.8
H7	1.8
H8	1.8
H9	1.8
H10	1.8
H11	1.8

Notes:

1. Contractors are advised to check all dimensions against the tree schedule. Tree canopies are symbolic only and are representative of the average spread; this may not represent the true outline. Note that the tree stem may not sit centrally to canopy. Tree stems are symbolic only and are representative of the tree category; this does not represent the stem diameter - see schedule for details.
2. The original of this drawing was produced in colour - a monochrome copy should not be relied upon.

Rev:	Date:	Status/Amendments:	By:

Key:

- Category A Tree / Group
- Category B Tree / Group
- Category C Tree / Group
- Category U Tree / Group
- Branch Spread
- Tree / Hedge to be Removed
- Root Protection Area (RPA)
- First Significant Branch Direction
- Tree Protection Barrier
- Special Measures
- Tree Shadow

GROWING SINCE ❦ 1982
TREE HERITAGE
Tree Heritage Ltd, Unit 1 Sneyd Mill, Sneyd Street, Leek, Staffordshire, ST13 5HP
Telephone: 01538 384019
treeheritage.co.uk ❦ info@treeheritage.co.uk

Client: Low Carbon

Project: Beech Tree Solar Farm, Salisbury

Drawing Title: Tree Protection Plan

Scale:	Paper Size:
1:2500	A1
Drawing Number:	**Date Created:**
THL-1156-5	07/03/2024

Appendix EDP 5
Technical Feasibility of Solar Farms
(DWD, January 2024)

Technical Feasibility of Solar Farms

69 Carter Lane,
London, EC4V 5EQ
T: 020 7489 0213
E: info@dwdllp.com
W: dwdllp.com

By: **DWD on Behalf of Low Carbon Solar Park 24 Limited**
Ref: **PL/2023/10394**
Date: **31 January 2024**

Beech Tree Solar Farm

1. Low Carbon Solar Park 24 ('The Applicant' or 'Low Carbon') submitted a full planning application on 28 November 2023 for the construction and operation of a proposed solar photovoltaic farm and associated infrastructure on land south of Salisbury Road, near Homington, Coombe Bissett, Salisbury (the 'Application Site'). The Application was subsequently validated on 14 December 2023 by Wiltshire Council under planning reference PL/2023/10394.

2. Planning permission is being sought to operate for 40 years, at which point it would be decommissioned and the land returned to its previous agricultural state. The proposal is hereafter collectively referred to as the 'Proposed Development' and the project is known as 'Beech Tree Solar Farm'.

3. The Applicant carried out a comprehensive and meaningful pre-application consultation exercise in respect of the Proposed Development, primarily focused on the local community, but also including consultation with parish councils and other key consultees. Since the formal submission of the application, several members of the public have commented on the absence of a cable that would connect the solar farm to the grid within the proposals. Further to this, on 11 January 2024 the application was 'called-in' to committee by a councillor member, if the application is recommended for approval by the planning case officer. The council member cited a number of reasons to call-in the application, which included the lack of grid connection and the ecological impacts associated with connecting the solar farm to the grid via an underground cable or through the Area of Outstanding Natural Beauty.

4. On 11 January 2024 the Planning Officer at Wiltshire Council requested further detail as to how the Site will be connected to the grid.

5. This memorandum has therefore been prepared to provide the requested information. The remainder of this note is structured as follows:

    - Detail on grid connection offer
    - Potential options for connecting into the grid
    - Absence of a material or statutory requirement to provide a cable connection within a Planning Application under the Town and Country Planning Act 1990 ('TCPA')
    - Recent appeal decision for Cutlers Solar Farm (Appendix 1)

Grid Connection Offer

6. The Applicant undertook a formal Grid Connection Offer process with Scottish and Southern Electricity Networks ('SSEN') in 2021 and received a grid connection offer for a solar farm on land associated with the Application Site, formerly referred to as Dogdean Solar Farm. Subsequently, an offer for an export and nominal import connection to the SSEN network at Homington substation was received and accepted by the Applicant.

7. Therefore, Beech Tree Solar Farm has secured a connection to the local electricity network and the capacity to send power to the network. The Point of Connection in this accepted offer is Homington substation. The Applicant has therefore progressed and submitted the planning application with the intent of connecting into Homington Substation (the 'point of connection' or the 'POC') located approximately 0.7 km south of the Site. This is explained in the submitted Planning, Design and Access Statement ('PDAS') (dated November 2023) in Sections 1, 3, 6 and 8. It is also important to note that limited opportunities currently exist for grid connections nationally and many renewable energy projects are being held up by constraints of the national grid which can take years to resolve

8. Evidence of the grid connection offer has been provided to the case officer on a confidential basis given the commercially sensitive information within it.

Potential Options for Connecting into the Grid

9. There are several options available to the Applicant and/or the District Network Operator ('DNO') for connecting Beech Tree solar farm to Homington Substation. Given this, the Applicant has not included the cable route within the submitted planning application to avoid confusion for the public.

10. The Applicant is currently exploring the following options:

    - Connecting the solar farm into existing pylons located on the Site that feed into Homington Substation. If this option was chosen it would not require an extensive cable route outside

of the Application Site redline boundary, shown on the submitted site location plan (Drawing Ref. LCS052-SP-01).

- The Applicant could also elect to lay a buried cable running alongside and / or under Homington Road into Homington substation subject to planning permission from Wiltshire Council and other relevant consents, including a section 50 agreement (under the Highways Act 1980) with the relevant Highways department. Following the feedback from the community about using Homington Road as a construction route, the Applicant elected not to include the buried cable route along Homington Road within planning application PL/2023/10394in order to further investigate alternative options. It should be noted that if the Applicant elected to submit a separate planning application to Wiltshire Council for a cable route of this nature, a full suite of environmental and technical surveys would accompany the application. Furthermore, the subsequent planning application (if required) would be subject to the normal planning process and public engagement. As such, the absence of the cable route within the submitted application does not minimise the level of community involvement within the proposals.

- Similarly, the Applicant could submit a planning application for a buried cable running along fields within the landowner's control and that of adjacent landowners, to Homington substation. A blueline plan (Drawing Ref LCS-052-01 Rev 06) was submitted with the planning application showing the extent of land within the Applicant's control. This would also be subject to a planning permission from Wiltshire Council as well as private land agreements between the Applicant and surrounding landowners. As above, a full suite of environmental and technical surveys would accompany the application. This includes mitigation for any potential watercourse crossing for a cable route via attaching a cable duct to an existing structure or using Horizontal Directional Drilling (HDD) which is a standard technique that effectively pushes a duct (typically 6 inches in diameter) under the ground and by remote control, directing it under the watercourse. Details of the process and an assessment of potential impacts would be outlined in any future planning application (if required).

- There is also potential for SSEN to install a buried cable under permitted development and/or other statutory powers. This option is also subject to ongoing discussions between the Applicant and SSEN.

Material Requirement

11. There is no statutory or material requirement for planning applications for solar developments submitted under the TCPA 1990 to include cable connection routes within their proposals. As such,

the absence of a cable route within the Beech Tree application would not comprise an appropriate reason for refusal in the event the application was not approved.

12. A recent appeal, *Cutlers Solar Farm Ltd. vs Uttlesford District Council* (Appeal Ref. APP/C1570/W/23/3319421) ('the Cutlers Appeal') reinforced the above point, with the Inspector concluding:

    "*… nothing was drawn to my attention which would require a solar farm developer to include the cable route corridor in the planning application. The originally submitted plans which identified this route were inconsistent in the amount of the route that they showed and, in any case, did not show the route in its entirety. Consequently, local residents would not have been able to comment on the route at application stage. Separate powers exist for statutory undertakers to carry out work for the transmission and distribution of electricity and the route will be determined having regard to the requirements of the statutory undertaker".* A copy of the Cutlers Appeal Decision is included at Appendix 1.

13. It should also be noted that several planning permissions for solar farms of a similar scale have been approved without the inclusion of a cable connection to an offsite POC. These applications include but are not limited to:

    - South Oxfordshire District Council: P20/S3244/FUL, Approved 26/10/2021.
    - South Oxfordshire District Council: P20/S3245/FUL, Approved 15/12/2021.
    - West Northamptonshire Council: WNS/2021/0498/EIA, Approved 25/11/2021.
    - Boston Borough Council: B/21/0443, Approved 7/2/2022.
    - Uttlesford District Council: UTT/22/0007/FUL, Approved 5/9/2023.

Appendix 1: Cutlers Solar Farm Appeal Decision

The Planning Inspectorate

Appeal Decision

Inquiry Held on 26 September to 12 October 2023
Site visit made on 11 October 2023

by Susan Heywood BSc(Hons) MCD MRTPI

an Inspector appointed by the Secretary of State

Decision date: 18/12/2023

Appeal Ref: APP/C1570/W/23/3319421
Land west of Thaxted, Cutlers Green Lane, Thaxted

- The appeal is made under section 78 of the Town and Country Planning Act 1990 against a refusal to grant planning permission.
- The appeal is made by Cutlers Solar Farm Ltd against the decision of Uttlesford District Council.
- The application Ref UTT/21/1833/FUL, dated 20 May 2021, was refused by notice dated 29 September 2022.
- The development proposed is the construction and operation of a solar farm comprising ground mounted solar photovoltaic (PV) arrays and battery storage together with associated development, including inverter cabins, DNO substation, customer switchgear, access, fencing, CCTV cameras and landscaping.

Decision

1. The appeal is allowed and planning permission is granted for the construction and operation of a solar farm comprising ground mounted solar photovoltaic (PV) arrays and battery storage together with associated development, including inverter cabins, DNO substation, customer switchgear, access, fencing, CCTV cameras and landscaping on land west of Thaxted, Cutlers Green Lane, Thaxted in accordance with the terms of the application, Ref UTT/21/1833/FUL, dated 20 May 2021, subject to the conditions set out in Annex 1.

Procedural matters

2. The Inquiry was closed in writing on 14 November 2023 following receipt of comments on suggested conditions. I address the conditions later in this decision.

3. Thaxted Parish Council became a Rule 6 Party at the Inquiry under Rule 6(6) of the Inquiries Procedure Rules. A Case Management Conference (CMC) was held with all parties on 1 August 2023 to discuss the procedural management of the Inquiry.

4. The site address on the Council's decision notice differs from that on the application form. At the CMC it was agreed that the correct address is that cited in the decision notice and this was subsequently agreed in the Overarching Statement of Common Ground. I have used that address in the heading above.

5. Reason for refusal 4 on the Council's decision notice relates to the lack of a S106 Agreement for the decommissioning of the solar farm and reinstatement of the land back to its original condition. The Council have subsequently agreed that this matter can be overcome by the imposition of a suitably worded condition. They did not therefore defend this reason for refusal. I see no reason to come to a different conclusion and the suggested condition is addressed later in this decision.

6. At the appeal stage, the appellants put forward a revised Planting Strategy as an alternative to that considered at the application stage, whilst maintaining that the originally submitted Planting Strategy would be appropriate mitigation for the scheme. I address this matter later in this decision.

7. It came to light during the inquiry that the application site area had been incorrectly drafted on the application and appeal documents. The documents identified the site area as 52ha when it is actually 64.5ha. The site area identified by the application red line has not altered as a result of this error. I have considered the appeal on the basis of the corrected figure.

8. Some of the application plans considered by the Council included part of the line of the electrical cable route corridor towards the point of connection to the electricity grid network. A varying extent of this line (not the totality of the route) was shown within the red line application boundary on the Development Zone Plan (LCS023 DZ-02 Rev 08), Indicative Site Layout External (LCS023 PLE-01 Rev 12) and West Thaxted Constraints Plan (LCS023 CP-02 Rev 01). However, the corridor was not shown within the red line application site boundary on the submitted West Thaxted Site Location Plan (LCS023 SP-01 Rev 05) and the description of development does not include this connection route.

9. At the appeal stage, the appellants submitted revised Development Zones, Indicative Site Layout and Constraints plans to ensure consistency with the Site Location plan by omitting this cable route corridor. The Council have no objections to these revised plans and have agreed that the off-site cable route corridor does not, and did not, form part of the original application. The Parish Council also agrees that the cable route does not form part of the site area or the appeal proposals. However, they consider that the omission of this route from the application does not give local residents the opportunity to comment upon this aspect of the proposal.

10. I have carefully considered this view. However, nothing was drawn to my attention which would require a solar farm developer to include the cable route corridor in the planning application. The originally submitted plans which identified this route were inconsistent in the amount of the route that they showed and, in any case, did not show the route in its entirety. Consequently, local residents would not have been able to comment on the route at application stage. Separate powers exist for statutory undertakers to carry out work for the transmission and distribution of electricity and the route will be determined having regard to the requirements of the statutory undertaker. Furthermore, as all parties agree that the cable corridor was not part of the original application or appeal, it follows that no prejudice arises from me determining the appeal on the basis of the revised plans.

11. The application has been submitted using the 'Rochdale envelope' whereby the precise details of the development have not been finalised at the application

and appeal stages. Instead, the application follows the approach of identifying Development Zones which will contain the solar arrays, battery storage, inverter cabins, substations and other associated infrastructure. An indicative site layout has been submitted within the Development Zones, but these could be subject to change at the detailed design stage. The approach allows some flexibility in the final design and siting of elements of the development. This is a reasonable approach in light of the evolving technology involved and that a contractor has not yet been appointed for the development.

12. The appellants have put forward a 'worst case' approach based on the maximum parameters of the scheme and I have considered the appeal on this basis. I am satisfied that the level of information submitted is sufficient for me to determine what the main impacts of the development would be and that the impacts can be satisfactorily controlled by the imposition of suitable conditions.

13. I note that Council Officers recommended the application for approval on a number of occasions, but the application was refused by the Planning Committee.

Main Issues

14. The main issues in this case are the effect of the development on:

- the character and appearance of the landscape
- the setting of designated heritage assets
- the use of best and most versatile agricultural land (BMV)
- whether other considerations, including the need for the development, outweigh any identified harms.

Reasons

Landscape character and appearance

15. The appeal site is spread across a number of irregularly shaped fields. Currently used as arable farmland, the fields are mainly enclosed by hedgerows, hedgerow trees, and woodland belts. In addition, part of the site is traversed by overhead power lines and large pylons.

16. The site lies within the B8 Thaxted Farmland Plateau as identified in the Landscape Character Assessment of Uttlesford 2006 (LCA). Key characteristics include a gently rolling plateau, broken hedgerows, expansive views on open roads at higher elevations and dispersed settlements, but with tranquillity severely altered by the Stansted flight paths.

17. The site does not lie within a designated landscape and it sits outside of the sensitive rural setting of Thaxted as defined in the Thaxted Neighbourhood Plan (TNP). Whilst the Council and appellants agree that the site does not lie within a valued landscape in terms of the National Planning Policy Framework (NPPF), the Parish Council disagree. The parties have considered this matter by reference to GLVIA3[1] and TGN 02/21[2].

[1] Guidelines for Landscape and Visual Impact Assessment Third Edition
[2] Technical Guidance Note 02/21 Assessing landscape value outside national designations

18. The Parish Council argue that the landscape scores highly on five of the value factors identified in TGN 02/21 – cultural heritage, landscape condition, distinctiveness, recreational and perceptual, although they confirmed at the inquiry that the strongest factors are cultural heritage and recreational aspects.

19. In terms of cultural heritage, the LCA notes that there is a strong sense of historic integrity in the Thaxted Farmland Plateau. Whilst there are no listed buildings within the site itself, there are some in the surrounding landscape and, to varying extent, the surrounding countryside / appeal site makes a contribution to the setting of some of those assets. This is addressed in further detail later in this decision. I note too that some historic field patterns and boundaries remain within the site. However, this is not an area where there are numerous or prominent historic features in the landscape, and I judge cultural heritage to make a medium to high contribution to the landscape.

20. I agree that the landscape condition is good. The fields comprise arable farmland, hedgerows are largely intact and well maintained. However, there is nothing remarkable about the condition of the landscape and overhead powerlines and pylons which cross the site are notable detractors. I would therefore categorise this factor as making a medium contribution.

21. The parties agree that the site and surrounding landscape is representative of the typical characteristics of farmland plateau. I note that rarity and representativeness (from GLVIA3 Box 5.1) translates to distinctiveness (in TGN 02/21). However, in the Council's evidence representativeness is used to set out the extent to which the site reflects the factors which are indicative of value, and I address these below.

22. Nonetheless, it is worth noting that there are no rare elements to the landscape either on or surrounding the site and no features have been drawn to my attention as particularly important examples of the landscape. There are occasional views towards the church spire and windmill in Thaxted from surrounding land, however these views are not so notable, prominent or frequent as to give the landscape a strong sense of place. The Parish Council use the same arguments to point towards a high score in terms of the perceptual (scenic) value factor. The appeal site is a pleasant but unremarkable tract of countryside and there is nothing that sets it apart from other land within the Thaxted Farmland Plateau. I therefore consider that these factors make a medium contribution to the value of the landscape.

23. The site is crossed by two footpaths and a byway and there are other footpaths crossing surrounding fields. I agree with the Council that the site provides a sequence of generally attractive views that contribute to the amenity of these routes. I would therefore agree with the Council that the recreational value is medium to high.

24. I acknowledge that local residents and visitors to the area, including people who use the local footpaths, undoubtedly place a value on the countryside within which the site lies. However, many areas of the countryside display similar characteristics to the appeal site and surroundings, including the use and enjoyment by the public for recreation. In assessing the site against the range of factors that can help to identify landscape value, I agree with the Parish Council that recreational and cultural heritage factors make the highest contribution. However, I do not put their value as high as the Parish Council and, overall, I consider that the landscape in this case has a medium value.

None of these aspects of the landscape are such that they elevate the site or surrounding area into that of a "valued" landscape. Accordingly, NPPF paragraph 174(a) does not apply in this instance.

25. Nevertheless, this does not mean that the landscape has no value and NPPF 174(b) requires decision makers to recognise the intrinsic character and beauty of the countryside, rather than the more stringent "protect and enhance" for valued landscapes.

26. The Council and appellants assess the susceptibility of the landscape to accommodate the development leading to an assessment of sensitivity. They go on to consider the magnitude of change leading to an overall effect of the development on landscape character. The results are summarised in Table EDP 4.1 in the Statement of Common Ground (SoCG) for landscape and visual matters.

27. The LCA sets out the sensitivity to change for the Thaxted Farmland Plateau character area. The sensitive characteristics include ancient woodlands and the open nature of the skyline of the higher, more exposed upper plateau level. All parties agree that no ancient woodlands would be affected in this case. The Parish Council also accepted that the development would not impinge on any important long-distance views. It is also of note that all of the key views of Thaxted identified in the TNP are located within the sensitive rural setting and the appeal development would not impinge upon any of these. The development would not impact upon the dispersed historic settlement pattern identified in the LCA nor would there be any impact on important wildlife habitats within the area, a matter I return to later in this decision.

28. The LCA identifies the Thaxted Farmland Plateau as having a relatively high sensitivity to change. Nonetheless, the Council and appellants agree that the effect of the development on the landscape character of the Thaxted Farmland Plateau would be minor to minor / negligible at year 15. Considering the impacts of the development on the key characteristics in the LCA, I concur with that view.

29. The Council's concerns relate to the impact on the more localised area. They and the appellants differ in their conclusions in relation to the effect on the landscape character of the appeal site at year 1 and 15 and the appeal site context at all stages (the Parish Council did not present their concerns in this manner).

30. The key elements leading to the Council's high susceptibility assessment of the site are agricultural land cover (which is stated to be of high value because of its contribution to visual openness, through which the natural terrain and hedgerow pattern can be appreciated), hedgerows and associated trees, openness, scenic quality, wildness and dark skies.

31. In terms of agricultural land, openness, hedgerows and trees, the site itself has an open character but the surrounding landscape is characterised by medium distance views, rather than expansive open views. The natural terrain is gently undulating, and the hedgerow pattern is that of hedgerows and trees along field boundaries with occasional woodland belts. The site and surroundings comprise an attractive sequence of arable fields and they have a moderate scenic quality, although this is impacted by the overhead line and large pylons crossing the site. The pylons and the farmed and managed nature of the site

and surroundings does not give the landscape a high degree of wildness. Given the rural nature of the surroundings, dark skies probably prevail although I heard no evidence on this matter. Overall, I consider the site and surrounding context have a medium susceptibility to change having regard to the factors assessed by the Council.

32. Accordingly, on the basis of what I have read, heard at the inquiry and seen on my site visit, I conclude that the site and its surroundings have a medium landscape value, a medium susceptibility to change and a medium sensitivity.

33. The proposed development would introduce linear structures, utilitarian in appearance and with hard, man-made materials into the currently open rural landscape. In this sense there would be a significant change in land use and loss of openness of the appeal site. Nevertheless, the solar panels would be low-lying features at a maximum of 3 metres high which retain a degree of permeability, with views gained between the rows of panels, particularly at close proximity to the site.

34. The appellants accept that the magnitude of change would be high (or very high) for the appeal site during construction and at year 1. At year 15, the change in the character of the site and the loss of its open nature would remain, albeit the landscaping will have matured at that stage. I agree with the Council that the magnitude of change within the site would remain high at year 15. The effect of the development would be major at year 1 but would be more moderate at year 15 because of the more mature landscaping.

35. When viewed in the wider context, parts of the site would be visible in some medium distance views. However, because the panels would sit on top of the land, the undulating nature of the surrounding topography would remain. The low-lying nature of the development would also mean that views would continue to be gained across the landscape of hedgerows and associated trees. The development would not therefore detract from the openness of the wider landscape. The effect of the development would be moderate at year 1 and moderate to minor at year 15.

36. Field sizes within the site and surrounding area are irregular. There are some large fields suited to modern agricultural practices and some smaller fields bounded by hedgerows. Field boundaries are a combination of sinuous and linear and I have noted above that some of these hedges follow historic field boundaries. The proposed solar farm would result in the subdivision of some of the larger fields and the creation of linear boundaries along which hedges are proposed. In the case of two of the Development Zones, their boundary would follow the line of the overhead electrical cables. The field and boundary pattern that the development would create would be in accordance with the established pattern within the area.

37. An argument was made that a solar farm is inherently rural and agricultural in character. I do not agree with that view. Solar panels can be located in rural and urban areas, I would not therefore describe them as being "inherently" rural in nature. Furthermore, whilst agricultural use of the land beneath the panels may continue, this would be incidental and may not happen in this case. The purpose of the use is not to produce anything from the land itself. Neither do I consider that they are yet commonplace features in rural areas, although they are becoming more widespread. On the other hand, solar farms do not display many of the features of an industrial use such as activity, storage, large

areas of parking or potential emissions, all of which could be associated with industrial uses. I note the decision at Maggotts End (S62A/2022/0011) where the Inspector described a solar farm as being *"overtly utilitarian industrial infrastructure"*. Whilst I agree that the solar arrays would have a utilitarian appearance, I do not agree with the assessment that the development would be industrial in nature, for the reasons set out.

38. I acknowledge that, visually, large scale solar farms can have similar characteristics to large scale polytunnels in agricultural settings. However, this does not make solar farms necessarily acceptable in a rural area. Their impact on character and visual amenity still needs to be assessed.

39. Turning to visual impact, I was directed to a number of viewpoints in the surrounding area and visited all of these on my site visit. It is notable they were all well within a 1km radius of the site and no long-distance views of the site were drawn to my attention. The visual impact of the proposal would therefore be localised over short distance views.

40. There was criticism of the viewpoint photography and photomontages submitted with the application. These were supplemented by additional visuals at appeal stage, including those from the Council and Parish Council. I am satisfied that I was able to make a comprehensive assessment of the proposals from the information before me and from my site visit.

41. Short distance views would be gained from the footpaths which cross the site as well as from nearby footpaths. Walkers and other recreational users, who are agreed to have a high sensitivity to adverse impacts, would see the panels, fencing, CCTV cameras, inverters and battery storage containers when using these routes. In the case of the footpath running north from Richmonds in the Wood, the development would be seen on either side of the footpath for much of its length. Nevertheless, the existing views from the footpath to the south of Development Zone 1 and that running north from Richmonds in the Wood are currently adversely impacted in parts by views of the pylons and overhead lines. Overall, the development would have a major adverse visual impact from these locations in year 1. This would reduce to a moderate visual impact over time, once the proposed landscaping develops.

42. The solar arrays on Development Zones 5 and 6 would also be visible through existing gaps in the hedgerow on either side of the byway and through gaps created by proposed new access routes (if these are not able to utilise existing gaps). The existing hedges and trees along the byway would provide moderate to good screening, although views through the hedges are likely to be greater in the winter months. Nevertheless, the visual impact along the byway would be moderate[3]. This would be likely to remain over time as there is no additional planting proposed in this location.

43. The further away the viewer travels from the site on the surrounding footpaths, the more the development would recede and the visual impact would therefore diminish. From more distant views, where the panels and associated development would be visible, they would be seen as a darker surface sitting within the landscape bounded by trees and hedges. They would have a

[3] Whilst a condition is imposed requiring exploration of the possibility of utilising existing gaps in the hedgerows for access into Development Zones 5 and 6, I have assessed the impact on the basis that additional access points would need to be created.

moderate to minor adverse impact from the identified viewpoints further away from the site.

44. Other users who would see the solar farm would be those who would pass along Bolford Street to the north of the site travelling towards or from the direction of Thaxted. People using the road are likely to be in vehicles due to the lack of footpaths along this road. The sensitivity of these users is therefore likely to be medium. Parts of the solar farm would be seen through gaps in the existing hedgerows. The impact on road users would be moderate to minor reducing to minor over time in the locations where supplementary planting is proposed.

45. I note that the solar farm would be visible from some of the published walks around Thaxted. The Parish Council also argued that cumulative impacts would occur due to the presence of other existing or consented solar farm schemes in the surrounding area. I have addressed above the concerns relating to the walks along the footpaths which pass through or close to the site. I note that other walks would pass close to solar farms to the east of Thaxted. However, there would be no intervisibility between the proposed development and any of the other solar farms, implemented or consented. One of the longer distance walks would pass the development site and the other solar farms to the east of Thaxted. However, there would be some considerable distance between these solar farms and the walk would take in large areas of countryside which are not impacted by solar farms. Consequently, there would be no cumulative impact on either visual amenity or the character of the countryside.

46. The original application included Planting Strategy and Landscape Strategy plans setting out the proposed landscaping for the site. Council Officers recommended approval of the application on the basis of these original landscape plans. During the appeal stage a revised Landscape Strategy plan was submitted[4]. This supplements the proposed landscaping in a number of important locations including some of the edges of the development where existing hedgerows are either minimal or absent. It is important that these additional areas of planting are included as part of the development to ensure that, over time, the visual impact of the development is minimised. It is also notable that the appellants' landscape consultant confirmed at the inquiry that he considered the revised scheme to be superior to the originally submitted scheme. I have therefore taken the revised plan into account in my assessment of the visual impact above. The proposed landscaping can be secured by an appropriate condition.

47. It has been suggested that the proposed landscaping itself would be harmful to visual amenity, closing off open views and resulting in a wall of hedging alongside some of the footpaths. I do not agree with this assessment. It is the proposed solar arrays which would lead to a loss of openness in localised views of the site, as I have set out above. The hedges would only be needed to screen and soften what would otherwise be stark views of the panels and fencing.

48. Furthermore, lines of native hedgerow and hedgerow trees tend to be viewed as positive features in a landscape due to their soft appearance, changing nature over the seasons, movement of leaves and branches and the likely presence of wildlife within them. Whilst hedgerows on either side of a footpath

[4] CD 6.1 as supplemented by Inquiry Document 14

can combine to form a tunnel, this does not appear to be the intention of the Planting Strategy. In any case, this would not necessarily be harmful along short distances and I noted that a stretch of the footpath near to Duckett's Farm has this characteristic. Management of the landscaping, which can be controlled by condition, could ensure this does not occur if necessary.

49. Policy S7 of the Uttlesford Local Plan, January 2005 (ULP) refers to the protection of the countryside for its own sake. Development is only permitted by the policy if its appearance protects or enhances the character of the countryside, or there are special reasons why the development in the form proposed needs to be there.

50. Rather than protection of the countryside for its own sake, the NPPF paragraph 174(b) seeks to recognise the intrinsic character and beauty of the countryside. In this respect ULP policy S7 is not wholly consistent with the NPPF. Despite the age of the plan, this does not render the policy out of date as it is generally in accordance with the countryside objectives in the NPPF.

51. Policy TX LSC1 of the TNP sets out that the countryside will be protected for its intrinsic character and beauty and for its value as productive agricultural land, for recreational use and biodiversity. Whilst the policy goes on to refer to the sensitive rural setting of Thaxted, it is agreed by all parties that, as the site lies outside Thaxted's sensitive rural setting as identified in the TNP, the second part of policy TX LSC1 does not apply in this case. I do not agree with the appellants' argument that this policy is out of date due to its reference to countryside protection. The need to recognise the intrinsic character and beauty does imply a level of protection, albeit not the same level as that of a designated or valued landscape.

52. The Council argues that part of Policy TX LSC2 of the TNP should be read as applying to development outside the sensitive rural setting of Thaxted. However, it is clear from the wording of the policy that it relates to development either within the identified landscape character areas (agreed not to be relevant in this case), or within the sensitive rural setting. I see no basis for splitting the policy in the manner suggested by the Council. Accordingly, I do not consider Policy TX LSC2 to be relevant to the development proposed.

53. To conclude on this issue, the development would cause varying degrees of harm to both the landscape character and appearance of the area. This would be greatest close to the site and reducing with distance and over time as landscaping matures. In this respect the proposed development would conflict with ULP policy S7 and TNP policy TX LSC1. Nevertheless, NPPF paragraph 158 takes a positive approach that applications should be approved if the impacts are, or can be made, acceptable. In this case the landscape and visual harm would not be significant and would be confined to a localised area. I therefore give moderate weight to this harm.

Heritage

54. Policy ENV2 of the ULP states that development affecting a listed building should be in keeping with its scale, character and surroundings. It goes on to say that development that adversely affects its setting will not be permitted. The latter part of this policy does not reflect the more balanced approach set out in the NPPF, which I set out below.

55. Policy TX HC1 of the TNP states that development within the neighbourhood area, which includes the appeal site, should have regard to the setting and significance of heritage assets and the character and appearance of Thaxted.

56. The NPPF sets out that in determining applications, regard should be had to the desirability of sustaining and enhancing the significance of heritage assets. Any harm to the significance of a designated heritage asset, including from development within its setting, should require clear and convincing justification. Where development will lead to less than substantial harm to the significance of a designated heritage asset, this harm should be weighed against the public benefits of the proposal.

57. There are no heritage assets on the appeal site. However, there are listed buildings in the surrounding countryside and a Conservation Area within Thaxted village. The Council considers that less than substantial harm would be caused to the Grade II listed buildings at Richmonds in the Wood, Loves Farmhouse and Spring Cottage. The Parish Council consider that there would also be less than substantial harm to Lower Farmhouse, Wayside and Tower Cottage all of which are Grade II listed. They also consider that there would be harm to the Thaxted Conservation Area and the potential for less than substantial harm to the Grade I listed Horham Hall. I will consider these heritage assets in turn.

Richmonds in the Wood

58. Richmonds in the Wood is a timber framed and plastered property, single storey with attics and red tiled half hipped roof. The building dates from the early 14th century. Built as an aisled hall with gabled cross-wing, the hall was extensively rebuilt in the late 16th century. The significance of the building is derived from its historic, architectural and artistic interest as a rural farmstead with associated barns.

59. To the north and west of the building lie former outbuildings which have been, or at the time of my visit were in the process of being, converted to residential properties. The buildings are surrounded by an enclosed garden incorporating trees and a driveway leading to the byway.

60. There is substantial screening around the property giving it a secluded appearance and the primary view of the building is gained from the driveway to its east. Nevertheless, the roof of the building can be seen from the footpath to the west and part of the property is also visible from the footpath to the north east.

61. Beyond the enclosed garden the property is surrounded by agricultural fields. Richmonds in the Wood lies in an isolated location away from other properties many of which are located towards Cutlers Green to the east. The greenspace and trees surrounding the property give it a sense of seclusion. The approach to the property along the narrow byway bounded by hedgerows and with glimpses towards the open agricultural fields to either side forms part of the isolated, agrarian setting and contributes to the significance of the building.

62. All parties agree that there was an historic functional relationship between Richmonds in the Wood and some of the farmland within the appeal site, as parts of the appeal site were within the same ownership. That relationship no longer exists but it nevertheless assists in understanding the origins and

history of the building. This is not something that can be seen when viewing Richmonds in the Wood or its surroundings. Nonetheless, the remaining proximity and physical relationship of the building to the surrounding open farmland enables the origins and development of the property to be understood.

63. The property is no longer a farmstead and there is now minimal interaction between the property and the surrounding land. Much was made at the inquiry regarding the loss of historic field boundaries, and Essex County Council's Historic Landscape Characterisation which defines the farmland as predominantly 20th century agriculture with some pre-18th century irregular enclosure. I accept that there has been a loss of many of the historic field boundaries within the site but note that a number of them still remain. Notwithstanding this loss, the surrounding agricultural land evokes the former functional relationship of the property with the farmland. I therefore consider that the open, rural, agricultural land surrounding Richmonds in the Wood forms part of its setting which contributes to the significance of the building.

64. The proposed development would result in solar arrays located within the field to the north of the property and in the two fields to the east and south east, on either side of the byway leading to the property. The solar arrays would be visible to a small degree from parts of the garden of the property looking towards the north and east. Some of the panels would also be visible in the same view as the roof of the building when traveling towards the property along the footpath from the west. On the approach to the property from the footpath to the north east of the building, the viewer would be travelling through solar arrays on either side, in the fields to the west and east, rather than the currently open agricultural fields. The same would be the case when travelling along the byway which would have solar arrays located to the north and south.

65. There would therefore be a change in character of the surroundings from open agricultural land to land containing solar arrays and the experience of the approach to the asset from a number of directions would alter. This would cause harm to the setting and therefore the significance of the listed building.

66. However, because the solar arrays would sit on top of the land, it would still be apparent that the arrays are located on former agricultural fields. Accordingly, the former functional relationship of the building with the surrounding farmland would still be discernible. Moreover, the sense of seclusion of the building and its isolated setting, away from other properties would be retained.

67. Thus, whilst I conclude that the development would cause harm to the setting and therefore the significance of the building, that harm would be less than substantial and towards the lower end of the scale.

Loves Farmhouse

68. Loves Farmhouse is a two storey, timber framed and plastered, 17th century building with red tiled roof. The property is surrounded by agricultural land to the east and south, beyond farm outbuildings. To the north the property overlooks an open triangular grassed area (referred to as the green below), to the west of which lies an agricultural field which forms part of the appeal site. Beyond the green lies Spring Cottage which I consider below. The significance

of the building is derived from its historic, architectural and artistic interest as a rural farmhouse.

69. The property has a strong visual connection with the green to the north and views from the green allow the architectural significance of the building to be appreciated. This part of its setting therefore contributes to the significance of the building.

70. The landholding associated with the farm in 1842 primarily consisted of land to the east and south east of the farmhouse. However, there was also an historic functional relationship between Loves Farmhouse and a strip of farmland within the appeal site to the west which was in the same ownership and occupancy. That relationship has now been severed. But the location of the property with agricultural fields to the west, south and east still allows the origins and development of the property to be understood and is evocative of the former functional relationship of the building with surrounding land.

71. The rural setting is apparent in the approach to the building along the byway towards the green. As views across the green open up, the viewer gets the sense of the building sitting within its rural, agricultural setting. This is not diminished by the loss of historic field boundaries along the approach. This setting therefore contributes to the significance of the building.

72. Nonetheless, the agricultural land to the west, upon which the arrays would be located, is physically separated from Loves Farmhouse by the lane, the green and a belt of vegetation between the green and the appeal site to the west. The farmland is apparent in the approach to the building and can be glimpsed through a gap in this vegetation on the boundary of the green. However, there is limited physical or visual connection between Loves Farmhouse and the land to the west. Accordingly, despite the former functional relationship with land to the west, that land makes a lesser contribution to the setting and significance of the building than the agricultural land to the east and south.

73. The solar arrays would be located on land to the west, beyond the vegetated boundary to the green. There may be glimpses of the arrays through that vegetated boundary, but any such views would not be significant and would not detract from the setting or significance of Loves Farmhouse to any great degree. However, the character of the approach to the farmhouse from west, along the byway, would be altered. This would erode the degree to which the farmhouse is experienced within an agrarian landscape when travelling from this direction. The development would therefore cause a small amount of harm to the setting of the building. This would amount to less than substantial harm to the significance of the asset, at the very low end of the scale.

Spring Cottage

74. Spring Cottage is a timber framed and plastered cottage with hipped thatched roof. It is single storey with hipped, thatched dormer windows in the attic. The property dates from the 17th century. The blank gable end of the property abuts the byway leading from the green towards Richmonds in the Wood. The front of the property faces towards the green but the treed and vegetated boundaries give a sense of enclosure to both the front and back gardens. Spring Cottage and Loves Farmhouse were both built in the 17th century and face each other on opposite sides of the green. The significance of the building is derived from its historic, architectural and artistic interest as a rural dwelling.

75. The primary setting of the property comprises the green and the relationship with Loves Farmhouse. In addition, historic maps show that the cottage has been surrounded by open, agricultural land since the earliest available map of 1777. The evidence demonstrates that Spring Cottage was in the same ownership as agricultural land within the appeal site, although there is no evidence that the occupier of the cottage also farmed the land.

76. There is no direct visual relationship between Spring Cottage and the appeal site. Nevertheless, the property is the first cottage to be reached on the approach along the byway from Richmonds in the Wood passing through the open agricultural landscape. The property is therefore experienced in the wider surroundings of the open rural landscape, much as it was at the time the asset was constructed. This setting therefore contributes to the significance of the building, although to a lesser degree than the properties outlined above. As with the other properties above, the loss of historic field boundaries does not diminish this contribution.

77. The solar arrays would be located on land to the west, beyond the vegetated boundary to the north and west of the property. There would be no inter-visibility between the solar arrays and the property. However, the character of the approach to Spring Cottage from west, along the byway, would be altered. This would erode the degree to which the building is experienced within an open rural landscape when travelling from this direction. The development would therefore cause a small amount of harm to the setting of the building. This would amount to less than substantial harm to the significance of the asset, at the very low end of the scale.

Lower Farmhouse, Wayside and Tower Cottage

78. The property listing describes Lower Farmhouse as a 15th or 16th century house, with extensive 20th century alterations. Its north west elevation faces agricultural land to the west and, beyond this, towards part of the appeal site. The significance of the building is derived from its historic, architectural and artistic interest as a rural farmhouse.

79. Wayside is described in the listing as deriving from the 17th century or earlier. It is timber framed and plastered with a thatched roof. Tower Cottage is also timber framed and plastered with a thatched roof. It dates from the 17th century. Both properties form part of the cluster of buildings situated along Bolford Street in Cutlers Green. The significance of both buildings is derived from their historic, architectural and artistic interest as rural dwellings.

80. The Tithe Map of 1842 shows that all three properties were in the same ownership as each other and as land to the west, outside the application site. The same owner also owned land within the southern part of the appeal site, Spring Cottage and Richmonds in the Wood. These functional relationships have now been severed. But the location of the properties with agricultural fields to the west (north in the case of Tower Cottage) allows the origins and development of the properties to be understood and is evocative of the former functional relationship of the buildings with surrounding land. Land to the west of Lower Farmhouse and Wayside, and to the north of Tower Cottage, therefore forms a small part of the setting of the buildings which contributes to a small degree to their significance. Much of that land, however, is located outside the appeal site.

81. The development would be located on land beyond the agricultural field immediately behind the properties. Whilst part of the development would be visible from the property boundaries, agricultural land would remain between the appeal site and the listed buildings. The development would be a sufficient distance from the properties so as not to erode the ability to understand the former functional connection between the buildings and surrounding agricultural land. Furthermore, as set out above, because of the nature of the development, it would still be apparent that the arrays are located on former agricultural fields. This aspect of the setting of the buildings does not contribute to the significance of the buildings to any great degree. For these reasons, the development would not cause harm to the understanding, appreciation or experience of the heritage assets and would not harm their significance.

Horham Hall

82. Horham Hall is Grade I listed. Originally built in 1470, extended and partially rebuilt in the early 16th century and with extensive restorations in the mid 19th century. It is a timber framed house, partially rebuilt in red brick, with red plain tiled roofs and 19th century crenelated parapets. The significance of the building is derived to a great degree from its historic, architectural and artistic interest as a building originating in the late 15th century and its development through time.

83. The building is located approximately 1km from the appeal site. The Council and appellants agree that there would be no harm to the significance of this building from the proposed development. Even the Parish Council, who raised concerns that the building was not considered in the Heritage Statement submitted with the application, do not suggest that harm would be caused to the building.

84. I have no information from any party regarding the setting of the building or the impact of the development on that setting. Neither do I have any information, beyond the listing of the property, which sets out the historical development of the property or any functional connections with surrounding land. From my own site visit it appears that the wooded parkland in which the hall sits forms an important part of the setting of the building. The building is surrounded by open agricultural fields, but the fields upon which the solar arrays would be sited would be some distance to the north of the property. These fields do not contribute to the significance of the building to any great degree.

85. Due to intervening vegetation and topography, there is minimal visual connection between the hall and the appeal site and I note that the Zone of Theoretical Visibility (within the LVIA) does not include Horham Hall. Any views of the solar arrays from the hall or its grounds would be distant and the arrays would only be seen as a darker surface area than surrounding land. This change in character would not cause harm to the significance of the building.

Thaxted Conservation Area

86. Thaxted Conservation Area is located some 2km to the east of the appeal site. On travelling towards the east from the appeal site, land rises towards the

centre of the Conservation Area and the windmill and church are prominent features sited on high land within the village.

87. The development would be viewed when travelling from the west towards Thaxted and it would change the character of the currently open agricultural land to land containing solar arrays. However, there would no inter-visibility between the appeal site and the Thaxted Conservation Area and large areas of agricultural land would remain between the site and the Conservation Area boundary.

88. As set out earlier in this decision, the appeal site is located outside of the Area of Sensitive Rural Setting for Thaxted as defined in the TNP and the Parish Council have not drawn to my attention any views from within the Conservation Area that would be affected by the proposed development. Important views of the windmill and church on the approach to the village would not be impacted. I conclude that the development would cause no harm to the character or appearance of the Conservation Area.

89. For the reasons set out above, I have found a low level of less than substantial harm would be caused to Richmonds in the Wood, and a very low level of less than substantial harm to Loves Farmhouse and Spring Cottage. Whilst the harm would be long term in its duration, it would be reversed following decommissioning.

90. The level of harm identified would lead to some conflict with TNP policy TX HC1. It would also conflict with ENV2 of the ULP. However, neither policy reflects the balanced approach in the NPPF. I go on to address the NPPF approach in the overall balance below.

Agricultural land

91. Local Plan policy ENV5 states that development of best and most versatile agricultural land (BMV) will only be permitted where opportunities have been assessed for accommodating development on previously developed sites or within existing development limits. Where development of agricultural land is required, poorer quality land is preferred except where other sustainability considerations suggest otherwise.

92. Paragraph 174b of the NPPF requires recognition of the economic and other benefits of BMV. Footnote 58 states that where significant development of agricultural land is demonstrated to be necessary, areas of poorer quality land should be preferred to those of higher quality. Whilst the latter relates to plan making, I consider it is a relevant consideration for this appeal.

93. The Written Ministerial Statement (WMS) on solar energy (March 2015) states that use of BMV for solar farms needs to be justified by the most compelling evidence.

94. The Planning Practice Guidance (PPG) on renewable and low carbon energy (also dated 2015) sets out the planning considerations for large scale solar development. These include: encouraging the effective use of land by focussing large scale solar farms on previously developed and non-agricultural land; where a proposal involves greenfield land, whether (i) the proposed use of any agricultural land has been shown to be necessary and poorer quality land has been used in preference to higher quality land; and (ii) the proposal

allows for continued agricultural use where applicable and/or encourages biodiversity improvements around arrays.

95. National Policy Statement (NPS) for Energy (EN-1) states that applicants should seek to minimise impacts on BMV and preferably use land of Grade 3b and below except where this is inconsistent with other sustainability considerations. It goes on to say that proposals should not be sited on BMV without justification. The Draft NPS for Renewable Energy Infrastructure (EN-3) (March 23) states that while land type should not be a predominating factor in determining the suitability of the site location, applicants should, where possible, utilise previously developed, brownfield, contaminated or industrial land.

96. Thus, whilst careful consideration needs to be given to the use of BMV, none of the policy or guidance set out above prohibits its use for large scale solar farms.

The site context

97. The provisional national Agricultural Land Classification (ALC) map indicates that the appeal site comprises Grade 2 agricultural land. An ALC report accompanied the application and the breakdown of ALC for the site (agreed between the Council and appellants) is set out in the SoCG for Agricultural Issues and reproduced below. Uttlesford District has a high proportion of land in Grade 2 (80.4% compared with 14.2% in England as a whole)[5]. Published strategic maps showing the likelihood of BMV indicate a high likelihood of BMV across Uttlesford (more than 60%). However, the Council also point out that within the wider Essex County area, 44% of land is Grade 3 or 4.

98. On the basis of the SoCG agreed between the Council and appellants, of the 64.5 ha appeal site, 54.9 ha of land is a mixture of Grade 2 (19 ha) or Grade 3a (35.9 ha) agricultural land. Thus, 85% of the total site area constitutes BMV. Some of the Grade 2 and Grade 3a land within the site boundary has been excluded from land to be covered by PV panels, together with some Grade 3b (which is not classified as BMV). As such, the total amount of BMV within the site area outside of the exclusion zones is 48.2 ha (16.9 ha of Grade 2, 31.3 ha of Grade 3a) or 92.2% of the site area.

99. Both the Council and the Parish Council consider that a more detailed ALC report at application stage may have demonstrated a greater proportion of BMV on the land or a greater proportion of the site falling into Grade 2. However, given the agreed high proportion of BMV on the site, I do not consider that the possibility of even higher proportions would make a material difference to my consideration of this issue.

100. I have limited information before me regarding the economic benefits of the BMV to the farm unit. From the appellants' undisputed evidence, the land is used to grow cereals and break crops, or grass and above ground crops such as stubble turnips. It is not suited for root crops. For the three-year period 2020-22 it had yields comparable with the national average. The Government's Farm Business Income data for 2021 demonstrates that, for arable farms, the agricultural income from crops only amounts to a small proportion of the overall farm income. This was not disputed by the Council's

[5] Agricultural Land Classification report CD2.11

expert agricultural witness. No evidence has been submitted regarding the economic benefits to the farm of diversification to a solar farm. However, it is to be expected that this would be at least comparable to the arable production in this case for the scheme to be pursued.

101. Nonetheless, the development would take this land out of production for the proposed 40 year life of the solar farm. This would be a disbenefit of the appeal proposal. However, the actual hectarage of BMV which would be taken out of production for the 40 year period, even if the entire site were to comprise BMV, would be small when compared to the amount of BMV land within Uttlesford District, let alone compared with the wider County or nationally.

102. I heard no compelling evidence that taking out of production almost 55ha of BMV on the appeal site, for a 40 year duration, would have a significant negative impact on food security either on its own or cumulatively with other BMV losses, nor that it would be likely to increase imports from other countries. The Government Food Strategy, published in 2022, stated that the UK is largely self-sufficient in wheat, most meats, eggs, and some sectors of vegetable production. Nothing in the Government food strategy policy paper changes the Government's policy towards the development of BMV as set out above.

Impact on agricultural land quality

103. The SoCG between the Council and appellants states that, subject to good practice through a Soil Management Plan (SMP), soils should not be adversely affected by the installation process of the solar panels. Further, there is agreement (between those two parties) that, subject to the SMP, the solar farm will not result in any significant damage to soils and downgrading of agricultural land quality across the majority of the site.

104. The Council's concerns are that SMPs are difficult to enforce which can result soil degradation which is difficult to remedy, that the 40 year life of the development should not be seen as temporary and that some land will be lost permanently (to access tracks, inverters, batteries, switch gear and biodiversity enhancement components of the site). The Parish Council is concerned that the soil can degrade across the entire site regardless of the implementation of a SMP.

105. The solar panels would sit on legs inserted into the ground. They would not require extensive excavation or foundations and much of the installation work would be carried out using small machinery, tractors and trailers. A properly drafted SMP can ensure that the work is carried out in dry conditions to ensure minimal soil damage. Digging would be required to install the cables, but again the SMP can ensure that the subsoil and topsoil is properly replaced and as such no harm would be caused to the land quality. Once operational the land between the panels would be managed for biodiversity and by mowing or grazing. Small vehicles would be used for cleaning by water. A condition requiring a SMP is included below and there is no reason to suppose that a SMP could not be effectively worded, monitored and enforced.

106. The SMP is to include the decommissioning in order to ensure that land is restored to its original ALC grading after the decommissioning phase. There is no evidence to suggest that run-off or shading from the panels would adversely

affect agricultural land quality. There may be environmental benefits from taking the land out of intensive farming for the duration of the use. The Council have pointed to similar benefits that can arise from more sustainable farming methods, but there is no evidence that such methods would be implemented on the appeal farm if this appeal were dismissed. Nevertheless, I note that this is an evolving area of research and I do not place significant weight on these possible benefits.

107. I refer to biodiversity benefits of the proposal later in this decision, but I note here that there would be a Biodiversity Net Gain (BNG) on the site of 112%. In this respect the proposal would be consistent with the encouragement in PPG for biodiversity improvements around arrays.

108. Whilst 40 years represents a long term, generational change, the development would not represent a permanent loss of the finite BMV resource. After the 40 year period the land would be available for farming once more. The Council suggested that recent changes to the NPPF relating to future re-powering and life extension of renewable and low carbon energy developments (paragraph 155a) would make it more likely that the development would become permanent. However, I must deal with the development on the basis of what is applied for. Decisions regarding any future use of the site would be made having regard to circumstances and policies in force at that time. Even if the use was extended in the future or became permanent, the amount of BMV which would remain out of production would not cause significant harm when compared to the amount of BMV in the District overall.

109. It is agreed between the Council and appellants that 2 ha of the appeal site would be taken out of production for a combination of tracks, inverters, batteries, switch gear and woodland planting. The Parish Council considers this figure would be greater on the basis that it should include cabling trenches and piles for the panels. However, I have addressed both of those points above and am satisfied that these will not lead to the permanent loss of BMV, subject to a SMP condition.

110. I consider it unlikely that the 0.8 ha to be planted as woodland would be removed and returned to agriculture after 40 years. It is therefore likely that there would be a permanent loss of 0.8 ha of BMV to woodland. The appellants claim that the remaining areas of tracks etc. (1.2 ha) could be returned to their former ALC with restoration of the soil. Whilst this may be possible, even if this were not the case, and taking into account that BMV is a finite resource, the permanent loss of 2 ha of agricultural land would be minimal and not significant either locally or nationally.

111. In responding to the planning application Natural England had no objection to the development stating that the proposal would not appear to lead to the loss of over 20 ha of BMV. They went on to say *"this is because the solar panels would be secured to the ground with limited soil disturbance and could be removed in the future with no permanent loss of agricultural land quality likely to occur."* They concluded that the development is *"unlikely to lead to significant and irreversible long-term loss (of BMV) as a resource for future generations."* I agree with this assessment.

112. Accordingly, I am satisfied that the agricultural land quality of the majority of the BMV on the site would not be harmed and the loss of production from

the site would not cause notable harm to food security. Any permanent loss of BMV would be small and not significant.

Alternative sites

113. In support of the application, the appellant provided an Alternative Sites Assessment (ASA) which I go on to consider together with the criticisms of it.

114. The ASA considered the availability of previously developed sites within 4km of the electricity grid connection secured at the Thaxted Substation and included a further desktop study of land within 5 miles of Thaxted. The assessment found no previously developed sites available for a solar farm of the size proposed within the study area. Only one brownfield site, much smaller than the proposed development site (0.5ha), was identified but this would not be suitable for a development of the size proposed. A larger barracks site would be a suitable size, but it does not appear to be available and is likely to be developed for housing if it becomes so.

115. The only non-agricultural land identified comprised areas of woodland which were ruled out for landscape and planning policy reasons. Whilst the study did not specifically consider land within existing development limits, the 4km study area included a number of settlements including Thaxted.

116. It is notable that the Council has not identified any such alternative sites. Whilst they are not obliged to do so, it would seem inconceivable for them to be aware of suitable sites but not to identify them, either during the application or appeal. It is also noteworthy that Council Officers recommended approval of the application having considered the content of the ASA.

117. The ASA was carried out retrospectively once the planning application had been submitted. This may have been a valid criticism if the assessment had subsequently identified potential sites which it retrospectively ruled out, but that was not the case. The retrospective submission of the ASA does not therefore reduce the weight to be attached to it.

118. The availability of a connection to the overhead line and grid connection distance have been criticised. A grid connection offer has been secured at the Thaxted Substation, approximately 4km to the north east of the site. This will ensure that the development can quickly become operational without having to wait for a grid connection to be granted. Given the constraints in the availability of grid connections nationally, this is an important factor. It has been well documented recently that constraints on connection to the National Grid is causing significant delay in allowing projects to contribute to renewable energy goals.

119. It is therefore reasonable for the 4km distance to be used to assess alternative sites and I understand that connection difficulties can arise as the distance from the grid connection point increases. I therefore give little weight to arguments that the development should be located on unidentified lower quality agricultural land elsewhere in Essex or beyond.

120. It has been suggested that alternative sites which are smaller than the appeal site should have been considered. However, there is no requirement in national or local policy for developers to seek smaller sites or to fragment their proposed operations. The availability of alternative forms of renewable energy, such as wind, has been raised. The Government's Policy Statements make

clear that both wind and solar will be required to meet the significant need to increase renewable energy generation to meet legally binding net-zero targets.

121. It has been suggested that rooftops should have been considered. Again, no national or local policy requires solar farms to consider rooftop locations in preference to BMV and it is likely that both ground mounted and rooftop panels will be needed to meet the Government's target of 70GW of solar power by 2035 and the requirement for net-zero by 2050.

122. The evidence demonstrates that there are no suitable, alternative sequentially preferable sites within the search area capable of accommodating the proposed development. The development has therefore complied with the requirement in ENV5 to assess previously developed sites and land within existing development limits in the first instance.

123. Policy ENV5 states that where development of BMV is required, poorer quality land is to be preferred and this reflects the national policy and guidance referred to above. As set out above, the wider area of Uttlesford is primarily identified as Grade 2 agricultural land and, within the 4km study area, only land along watercourses is undifferentiated Grade 3 land. The Local Plan sets out that the Grade 3b land within the District tends to be important to the character and biodiversity of the area. Based on the provisional national ALC map, there is therefore no clearly available land of lower ALC than the appeal site that could be utilised for the development.

124. The only way of definitively identifying whether other land within the 4km search area is of a lower quality would be to undertake detailed field studies. However, it would not be proportionate to require developers of individual sites to undertake wide ranging studies of this nature to justify their proposals. Nothing in either local or national policy requires them to do so, and NPS EN-1 sets out that the consideration of alternatives should be carried out in a proportionate manner.

125. The ALC report accompanying the application considers a larger area than the appeal site. Within the larger area 43 ha of Grade 2 land was identified. In the appeal development 16.9 ha of this Grade 2 land would be covered with panels. For Grade 3a, 57 ha were identified within the larger area and 31.3 ha would be covered with panels. Whilst the area excluded from panels in the application site also includes some Grade 3b land, 4.1 ha of 16 ha identified in the larger area would be utilised. It can be seen therefore that, whilst a significant proportion of the appeal site would involve the development of BMV, a large amount of Grade 2 and Grade 3a has been excluded from the appeal site or from panel coverage within the site.

126. The majority of the development would not be located on poorer quality land, in this respect it would conflict with local and national policy. However, the above factors moderate the weight I give to this conflict.

127. Reference has been made to a number of appeal and other decisions. In Appeal Ref: APP/F1040/W/22/3313316 it was clear that the surrounding area did include significant areas of Grade 3 agricultural land. The potential availability of an alternative site in that case also formed part of the consideration. In s62A/2002/0011, no mention is made of a grid connection offer as a justification for the 4km search distance in the ASA, a factor which I

have found to be important in this case. The ASA was also found not to have had regard to the proximity of the site to a different local authority area.

128. In appeal APP/K2610/W/21/3278065 the approval of a solar farm on an alternative site using less BMV was a significant factor. Similar considerations in relation to the availability of lesser value agricultural land were taken into account in APP/D3505/A/13/2204846. I note the latter appeal was determined in 2014 and, whilst Government policies on the use of BMV are similar now to those in place at that time, the policy and legal context in relation to climate change has altered significantly. The same can be said of the Secretary of State decision in APP/M2270/A/14/222655 dated 2015. This limits the weight that I place on these older decisions.

129. On the other hand, a number of decisions, including recent Secretary of State decisions for Development Consent Orders, have been drawn to my attention where the use of BMV has been accepted for large scale solar farms. As the decisions before me pull in different directions and are based on different circumstances it is unhelpful to place undue reliance upon them and I have based my conclusions on the circumstances of the case before me.

130. Bringing together the above, I have concluded that the agricultural land quality would not be harmed and the BMV resource would not be lost to future generations. Nevertheless, the land would be taken out of agriculture for 40 years and there would be conflict with national and local policy which seeks to direct development away from BMV where possible. I therefore conclude overall that this matter weighs moderately against the development.

Other Considerations

Need for renewable energy

131. The Climate Change Act 2008, as amended, sets a legally binding target to reduce net greenhouse gas emissions from their 1990 level by 100% to reach Net Zero by 2050. There is also a need to reduce reliance on imported fossil fuels in the interests of energy security and to ensure less volatile energy prices for UK consumers. The national need for renewable energy developments in this context is not disputed in this appeal.

132. NPS for the delivery of major energy infrastructure are material considerations in the determination of planning proposals. The NPSs EN-1 and EN-3 do not specifically refer to solar generated power, but they do set out the urgent need for renewable energy electricity projects to be brought forward. Draft updates to NPSs EN-1 and EN-3 identify, as part of the strategy for the low-cost decarbonisation of the energy sector, solar farms which they see as providing a clean, low cost and secure source of electricity.

133. There have been a number of Government policy statements and commitments produced in relation to energy and climate change in recent years. These include the Energy White Paper: Powering our Net Zero Future (2020), the Net Zero Strategy: Build Back Greener (2021), which sets an ambition for the UK to be powered entirely by clean energy by 2035. Powering Up Britain was published on 30 March 2023. This recognises that moving to a system that relies primarily on low carbon technologies is crucial to deliver cheaper, cleaner, domestic energy. One of its goals is to increase solar power fivefold by 2035. It recognises that both ground mounted and rooftop solar will

need to be maximised to achieve this target. It notes that ground-mounted solar is one of the cheapest forms of electricity generation and is readily deployable at scale.

134. Powering Up Britain reiterates that large scale solar farms should be mainly on brownfield, industrial and low / medium grade agricultural land. However, it makes clear that the Government will not be making changes to the ALC classifications in ways that might constrain solar development.

135. In a local context, the Essex Climate Action Commission, set up by Essex County Council, recommended that Essex should produce enough renewable energy within the County to meet its own needs by 2040. Uttlesford District Council declared a climate emergency and ecological emergency in 2019. Its Climate Crisis Strategy commits to achieving net-zero carbon status by 2030.

136. ULP policy ENV15 only relates to small scale renewables and there is no local policy relating to large scale renewables developments. The Council produced a supplementary planning document 'Solar Farms' in 2021. This indicates that solar farms need to be considered on the basis of national planning policy.

137. Paragraph 152 of the NPPF sets out that the planning system should *"support renewable and low carbon energy and associated infrastructure."* Paragraph 158 sets out that Local Planning Authorities should *"not require applicants to demonstrate the overall need for renewable or low carbon energy and recognise that even small-scale projects provide a valuable contribution to cutting greenhouse gas emissions."* It also states that Local Planning Authorities should *"approve the application if its impacts are (or can be made) acceptable."*

138. Whilst my attention has been drawn to speeches by MPs on the issue of renewable energy, these are not current statements of Government policy and I therefore give minimal weight to them.

139. The proposed development would generate approximately 40 MW of renewable energy which, over the course of a year, could provide approximately enough energy to power over 13,291 homes and displace approximately up to 8,986 tonnes of carbon dioxide per year.

140. I note that the number of solar farms consented in or close to the District recently has added to the local renewable energy generation capacity beyond that set out in the appellants' evidence. Nevertheless, total capacity would still not be sufficient to meet the 2019 electricity demand in the District. And the 2019 demand level does not factor in likely increases in electricity demand in future.

141. Moreover, it seems clear that, in order to achieve the national, legally binding Net Zero target, a significant increase in renewable energy such as solar will be needed across the board. This applies even in areas where there are already a number of solar farm developments, subject of course, to the consideration of its impacts. As stated earlier a grid connection offer has been secured for this development. This will ensure that the development can quickly make a significant contribution towards these legally binding Net Zero targets. Accordingly, I give substantial weight to the generation of renewable energy, the contribution the development would make to a low carbon economy and the provision of low cost and secure energy.

Biodiversity

142. The application was accompanied by an Ecological Impact Assessment (EIA) and further information relating to breeding birds and an Arboricultural Impact Assessment. The EIA concluded that the existing arable fields have limited ecological importance. Positive benefits of establishing grassland on the site would be likely to result in a positive impact upon biodiversity.

143. Natural England's response to the application confirms that the development will not have significant adverse impacts on statutorily protected nature conservation sites or landscapes. I also note that the Council has not raised objections on these grounds. Conditions are imposed relating to ecology and biodiversity including the requirement for a long-term management plan. A condition is also imposed relating to Skylark mitigation. I am satisfied that any residual risk can be satisfactorily overcome by the imposition of these conditions and the proposal would comply with ULP policy ENV8 and TNP policy TX LSC3.

144. The Overarching Statement of Common Ground sets out the agreement between the Council and appellants that the proposed development would have a Biodiversity Net Gain (BNG) of +206.49 Habitat Units (a net gain of over 165%) and +5.94 Hedgerow Units (a net gain of 10.99%). I note, however, that the appellants' Planning evidence cites a net gain of +152.82 Habitat Units (112%) and +20.43 Hedgerow Units (42.77%) using the updated Biodiversity Metric 4.0. Whilst BNG will be a requirement of the Environment Act 2021, the minimum requirement is currently set at 10%. Even taking the appellants' evidence, a gain of 112% is a further benefit of the scheme. This benefit would endure beyond the operational life of the proposal and would be unlikely to be realised in the absence of the proposed development. This attracts significant weight in favour of the proposal.

Drainage and flooding

145. The site is located within Flood Zone 1, with the least risk or probability of flooding. The application was accompanied by a Flood Risk Assessment which concluded that the site would drain as close as possible to the existing situation with run-off intercepted by filter trenches adjacent to the proposed internal access roads and swales at low points of the site to collect and slow surface water run-off prior to discharging to existing drainage ditches or watercourses.

146. Further information was submitted which proposes woodland planting around Waterhall Farm and an attenuation pond to the south west of that property. These features would intercept surface water run-off and increase infiltration rates around the property.

147. The Lead Local Flood Authority raised no objections to the application subject to the imposition of a condition and the Council do not object on these grounds. I am satisfied that the FRA and additional information provides a robust assessment and that the detailed scheme would be covered by a condition. In this regard, the proposal would accord with the NPPF and ULP policy GEN3 relating to flood protection

Fire safety

148. The application includes battery storage and concerns have been raised regarding the potential fire risk of such facilities, including the proximity to the high-pressure gas pipeline which crosses part of the site.

149. The PPG has been updated in relation to Battery Energy Storage Systems (BESS). The PPG notes the flexibility and cost-effectiveness of providing BESS which allows for the maximisation of usable output from intermittent low carbon generation. Applicants and Local Planning Authorities are encouraged to consult local fire and rescue services prior to planning permission being granted.

150. No such consultation has taken place in this case. Nevertheless, an Outline Fire Safety Management Plan was submitted during the application stage. This explains that the safety of solar farms is governed by a number of non-planning regulatory regimes. A detailed design will be provided in advance of construction of the BESS to demonstrate that it will be constructed and operated safely.

151. The consultation response from the Council's Environmental Health Officers did not raise fire risk as a concern and the Council did not object to the appeal on this basis. Officers recommended approval of the development having had regard to the information submitted by the applicant. In addition, I note that Exolum, the operator of the fuel pipeline, did not object to the application.

152. A condition is imposed to ensure that a Battery Safety Management Plan (BSMP), including a Fire Safety and Emergency Response Plan, is submitted. This must involve consultation with Essex County Council Fire and Rescue Service and the Health and Safety Executive. There is no compelling evidence to suggest that it would not be possible to meet the requirements of these bodies.

153. I note the conclusion of the Inspector in appeal APP/Y1138/W/22/3293104 *"that other regimes operate in this field to regulate the safe operation of such installations. National policy is clear that the focus of planning decisions should be on whether a proposal is an acceptable use of land, rather than the control of processes where these are subject to separate regimes. Planning decisions should assume that these regimes will operate effectively. For the above reasons there is nothing in relation to the safety of the BESS which should weigh against the proposal in the planning balance."* The Secretary of State agreed with this approach.

154. Having considered the evidence in this case, I concur with the Inspector, and Secretary of State, in the above appeal and conclude that this matter does not weigh against the granting of planning permission in this case.

Glint & glare

155. The appellants have submitted a glint and glare assessment to consider the possible effects upon aviation traffic associated with Stanstead Airport. The study concludes that there would be no impact on aviation safety and this was not disputed by the Council. The study does not specifically relate to potential impacts on the surrounding area. However, a condition is imposed requiring approval of external specifications and materials and I have reworded this to

ensure that the materials are suitably non-reflective. This will ensure that no harmful effects arise in this regard.

Other matters raised

156. It is inevitable that the construction activity would result in noise and disturbance to local residents along the construction access route and those properties closest to the appeal site. However, this would be time limited and can be kept to a minimum by the imposition of conditions relating to construction management and hours. Noise from batteries and inverter units can be controlled by the imposition of suitable conditions which would ensure compliance with ULP policy ENV11 and GEN4. I note that the Council's Environmental Health Officers did not object to the proposal on the grounds of noise.

157. Outlook from Richmonds in the Wood and Waterhall Farm would be altered as a result of the proposed development, but the intervening agricultural land and proposed screening would ensure that no significant harm would be caused to the outlook from those properties. Subject to a number of the conditions imposed, the proposals would not conflict with ULP policy GEN2 which is a general design policy.

158. The Council's Highway Officers did not object to the development on highway safety grounds and I have no reason to disagree with this conclusion. Concerns have been raised in relation to the manufacture of PV panels but I have little objective evidence to suggest that this should be a significant factor in my determination. Whilst it has been claimed that there would be no benefits to the local community, everyone will benefit in the long-run from cheaper renewable energy and reduced reliance on fossil fuels.

Overall balance and conclusions

159. NPS for Energy (EN-1) advises that when *"having regard to siting, operational and other relevant constraints the aim should be to minimise harm to the landscape, providing reasonable mitigation where possible and appropriate."* It further states that a judgement is to be made as to *"whether any adverse impact on the landscape would be so damaging that it is not offset by the benefits (including need) of the project"* having regard also to whether the project is temporary and/or capable of being reversed.

160. Therefore, national policy recognises that large scale solar farms may result in some landscape and visual harm. However, it adopts a positive approach to such developments indicating that they can be approved where the impacts are, or can be made, acceptable and where the harm is outweighed by the benefits. I note that the Council's planning and landscape officers, in recommending approval of the proposal at the application stage, considered that the adverse impacts of the scheme would be mitigated in time by the proposed planting such that it would be consistent with the NPPF and relevant development plan policies.

161. In my judgement, through a combination of topography, existing screening and landscape mitigation, the adverse effect on landscape character and visual impact would be localised and moderate other than in very close proximity to the site. Moreover, as the existing and proposed planting matures, adverse effects would be progressively mitigated in most locations and once

decommissioned there would be no residual adverse landscape effects with the enhanced landscape and biodiversity likely to endure. Whilst there would be conflict with ULP policy S7 and TNP TX LSC1, I have given moderate weight to the localised harm that would be caused.

162. Turning to heritage matters, Sections 66 and 72 of The Planning (Listed Buildings and Conservation Areas) Act 1990 are engaged. Section 66 requires the decision maker to pay special regard to the desirability of preserving listed buildings, their settings, and any architectural features they may possess. Section 72 requires the decision maker to pay special attention to the desirability of preserving or enhancing the character or appearance of a Conservation Area.

163. Whether a proposal results in substantial or less than substantial harm to the significance of a heritage asset, NPPF paragraph 199 requires the decision maker to attach great weight to its conservation. Paragraph 202 says that where a proposal would lead to less than substantial harm to the significance of a heritage asset, this harm is to be weighed against the public benefits of the proposal.

164. The proposal would result in less than substantial harm at the low and very low end of the scale to the heritage significance of three heritage assets. In relation to the Thaxted Conservation Area as a whole, the proposal would preserve its character and appearance. In this context, recognising that considerable importance and weight must be attached to the conservation of a heritage asset, I consider the very significant public benefits I attach to the provision of renewable energy, together with the BNG benefits to which I have attached significant weight, clearly and decisively outweigh the less than substantial harm to the heritage assets involved. There would be conflict with ULP policy ENV2 and TNP policy TX HC1, however the weight I give to this conflict is moderated as they do not reflect the above balanced approach of the NPPF.

165. Turning to the issue of agricultural land, national and local policy seeks to discourage development of BMV, preferring previously developed land or poorer quality land rather than that of higher quality. I have attached moderate weight to the loss of productivity of that land for the 40 year period and the resultant conflict with ULP policy ENV5 and national policy and guidance. That said, nothing in local or national policy puts a moratorium on the development of such land where that has been found to be necessary.

166. I recognise that the 2015 WMS requires the most compelling evidence for the development of solar farms on BMV. However, this must be read in light of more up to date events. This includes Parliament's declaration in 2019 that the UK is facing a climate change emergency; the support in the NPPF, most recently amended in 2023, for renewable development; the statements in several policy documents on energy and climate change issued since 2015, as set out above; and the draft NPS EN-1 and EN-3. It must also be viewed against the increasing imperative to tackle climate change, and to meet the legally binding Net Zero targets. Together with the specific considerations in this case, I conclude that these factors provide the most compelling evidence to justify the use of BMV in this instance.

167. I have identified conflict with relevant ULP and TNP policies. The development would not therefore comply with the development plan as a

whole. The ULP in particular is now of some age, and I have noted that there is no policy relating to large scale solar farms. Nevertheless, this does not mean that there are no relevant development plan policies. Neither does it mean that the most relevant policies are necessarily out of date, although I have given greater weight where necessary to the NPPF. I therefore need to determine the appeal in accordance with the development plan unless material considerations indicate otherwise.

168. Bringing together the above, I conclude that the substantial weight to renewable energy generation and significant weight from BNG improvements are material considerations of sufficient weight to outweigh the harms I have identified. This justifies allowing the appeal other than in accordance with the development plan in this instance.

Conditions

169. The main parties discussed the conditions during the inquiry. The final draft wording of the conditions (including those with pre-commencement requirements) was agreed between the Council and appellants after the final sitting day of the inquiry and before the inquiry was closed in writing.

170. I have had regard to the comments received from the Parish Council on the draft conditions. For a number of conditions the Parish Council requests that they be consulted when details are submitted for approval. It would be for the Council to determine whether they wish to set up such informal consultation processes with the Parish Council within the time constraints for discharging conditions. It is not a matter for me in this appeal and I have not therefore included any such wording in any of the conditions.

171. I have amended the wording where necessary having regard to the tests set out in paragraph 56 of the NPPF and to assist with clarity. The numbers in brackets relate to the condition in the attached annex.

172. The standard time limit (1) and plans (2) conditions are necessary to provide certainty. I have included reference to the revised Landscape Strategy Summary of Changes submitted as an inquiry document for the avoidance of doubt as to the approved landscaping scheme (also added as an amendment to condition (4)). A condition (3) is required to ensure the precise details of the final development are submitted in the interests of certainty. I have included the use of non-reflective materials as set out above, in the interests of the character of the area and to protect the living conditions of nearby residents. Landscaping details are required (4) to protect the character of the area. I have included that this should be carried out within the first planting season following completion of construction as this will ensure that it is completed in a timely manner but that new landscaping will not be damaged by construction activity.

173. Conditions (5) and (6) are required to ensure that biodiversity mitigation and enhancement as detailed in the specified reports submitted with the application. I have added a timescale for implementation to be agreed with the Local Planning Authority to condition (5). The number of Skylark nest plots will be agreed with the Council as part of the strategy. I have altered the wording to remove the requirement for a legal agreement as it is not appropriate to require a legal agreement via a condition. The mechanism for securing the measures will need to be included in the Mitigation Strategy. I have also

altered the wording of the condition such that the long term maintenance and retention of the Skylark nest plots is agreed with the Council having regard to the submitted details of the final scheme.

174. Condition (7) relates to a Landscape and Biodiversity Management Plan (LBMP). I have altered the timescale for submission in order to ensure that it relates to the implementation of conditions (5) and (6). I have also included a clause to ensure prevention of harm to the Debden Green Special Roadside Verges. This condition is required to ensure long term maintenance of the landscaping and biodiversity enhancement measures in the interests of the character of the area and the protection and enhancement of biodiversity. Condition (8) relates to lighting and is necessary in the interests of the character of the area and biodiversity.

175. A condition is required (9) to ensure the submission of a Battery Safety Management Plan (BSMP) in the interests of public safety. It is appropriate for the BSMP to be submitted and agreed prior to the commencement of the Battery Energy Storage System (BESS) to which it relates. It would be in the appellants' interests to agree this with the relevant fire authorities as early as possible to avoid any post construction alterations to the site. Nevertheless, the condition as worded would ensure that the relevant authorities would need to be satisfied with the BESS prior to its construction. The additional wording suggested by the Parish Council is unnecessary as it is to be expected that the relevant authorities would seek to ensure that all relevant legislation and standards are met at the time.

176. A condition is imposed requiring a Construction Traffic Management Plan (10). The wording of the condition would ensure satisfactory protection and management of the public rights of way through the site.

177. Conditions are imposed requiring pre and post highway condition surveys including any measures for necessary repair works (11), timing of construction traffic and deliveries (12), surfacing materials of vehicular accesses (13), closure of temporary construction accesses and crossings and reinstatements of public rights of way (16), construction access details (17), details of gates on the Bolford Street access (19), public rights of way management plan to be submitted (20).

178. A condition relating to the construction and operational access from the byway leading to Richmonds in the Wood is required (18). It was agreed at the inquiry that this would include the investigation of whether existing gaps in the hedgerows could be utilised for the access points in the interests of the character of the area. I have altered the wording slightly to ensure that this is a consideration for all of the access points along the byway.

179. All of the above conditions are required in the interests of highway safety and / or local amenity. Timing of construction work is detailed in condition (15) also in the interests of local amenity.

180. In the interests of biodiversity and local amenity, a Construction Environmental Management Plan (CEMP) is required (14). Watercourse pollution protection is included in this condition. Notwithstanding the wording of condition (22) below, I have included the wording relating to surface water and groundwater flooding requested by the Lead Local Flood Authority and the Parish Council, as this specifically relates to the construction period.

181. A condition is required to ensure adequate drainage and flood protection (22). Wording has been suggested by the Parish Council that there should be no increased surface water flow to adjacent watercourses at Waterhall Farm. Increased surface water would only create a problem at Waterhall Farm if it increased the risk of flooding. The condition already includes wording to ensure that surface water does not increase offsite flooding as a result of the development. The additional wording is not therefore necessary and I share the appellants' concerns that it would be difficult to enforce. However, I agree with the Parish Council that the implementation of the surface water drainage scheme should be linked to the construction of the development as that is when the impact would be created. I have altered the implementation timing accordingly.

182. An Archaeological Management Plan is required in order to ensure the protection of any such heritage assets (21). A condition is required to ensure the submission and implementation of a Bird Hazard Management Plan in order to ensure aviation safety at Stanstead Airport (23). Condition (24) requires a noise survey in the interests of local amenity. I note that the agreed wording has included low frequency noise. Other wording has been suggested by the Parish Council. The scope of the survey must be agreed with the Local Planning Authority, it requires noise levels at the boundaries of agreed noise sensitive receptors to be 5dB (LAeq) below the existing background level and ensures that any plant that fails to comply must not be used until it is able to comply. I do not consider that further restrictions, including a requirement for testing and monitoring, would be necessary or reasonable. It is to be expected that, if noise becomes a problem to local residents, they would bring this to the attention of the Council.

183. The requirement for a Soil Management Plan (25) has been set out in the reasoning above. I have made some minor alterations to the wording to ensure precision. For the avoidance of doubt, condition (27) clarifies the time limited nature of the proposal for 40 years. I have altered the wording of this condition to ensure it is precise. In the interests of public amenity, condition (26) requires the submission and implementation of a detailed Decommissioning Method Statement prior to the development ceasing. The wording of this condition would meet the tests for conditions in the NPPF.

Conclusion

184. For the reasons set out above, I conclude that the appeal should be allowed.

Susan Heywood

INSPECTOR

Annex 1 – Conditions

1) The development hereby permitted shall begin not later than 3 years from the date of this decision.

2) The development hereby permitted shall be carried out in accordance with the details shown on the following approved plans: Site Location Plan ref. LCS023-SP-01 Rev 5, Development Zones Plan ref. LCS023- DZ-02 Rev 09, Indicative Site Layout Plan ref. LCS023-PLE-01 Rev 13 and Planting Strategy ref. P20-1298_09 Rev C (as amended by Landscape Strategy Summary of Changes Inquiry Document 14), except as controlled or modified by the conditions of this planning permission.

3) Prior to the commencement of the development, full details of the layout and appearance (including the specification and colours of suitably non-reflective external materials to be agreed) of the development, including the solar arrays, inverters, batteries, DNO substation, access tracks, CCTV cameras, fencing, and other associated infrastructure must be submitted to and approved in writing by the local planning authority. The details must not exceed the maximum dimensions shown on plan refs. LCS-SD-01 Rev 02 (DNO Substation Elevations and Dimensions Plan), LCS-SD-02 Rev 02 (Customer Substation Elevations and Dimensions Plan), LSC-SD-03 Rev 01 (Indicative CCTV Post-Standard Drawings), LSC-SD-04 Rev 02 (Security Fence and CCTV Standard Detail), LCS-SD-07 Rev 01 (Indicative Deer Fence Standard Detail), LCS-SD-08 Rev 02 (Inverter Elevations and Dimensions Plan), LCS-SD-17 Rev 01 (Panel Arrangement 4 Landscape 29.5 Degree Tilt) and LCS-SD-19 Rev 01 (40ft Battery Container (HVAC on Roof) Standard Detail). The development must be constructed and operated fully in accordance with the approved details.

4) Prior to commencement of development, full details of the hard and soft landscaping shown on the Landscape Strategy Plan Ref. edp7983_d007a (as amended by Landscape Strategy Summary of Changes Inquiry Document 14), must be submitted to and approved in writing by the local planning authority. The details must include:

   - finished site levels;
   - soft landscaping, including plant types and densities across the site and within the Public Rights of Way corridors;
   - a planting programme;
   - hard landscaping, including the material used for access tracks, parking areas and turning circles; and
   - the type and location of fencing, gates and any other means of enclosure.

   The details must be implemented as approved and the soft landscaping carried out within the first relevant planting season following the completion of the construction phase of the development.

5) Prior to the commencement of development, full details of the biodiversity mitigation and enhancement measures, including a Biodiversity Plan, must be submitted to and approved in writing by the local planning authority. The details must be in accordance with the

Clarkson & Woods Ecological Impact Assessment (May 2021), the Clarkson & Woods Breeding Bird Survey (Addendum to Ecological Impact Assessment) (July 2021), the additional information on biodiversity provided by Clarkson & Woods dated 16 September 2021 and provided by Pegasus dated 14 March 2022. The details shall be implemented as approved within a timescale to be approved by the Local Planning Authority.

6) Prior to the commencement of the development, a Skylark Mitigation Strategy must be submitted to and approved in writing by the local planning authority to compensate the loss of any Skylark territories at the site.

The Skylark Mitigation Strategy must include provision of the evidenced number of Skylark nest plots, and the mechanisms to secure these in nearby agricultural land, prior to commencement of the development.

The content of the Skylark Mitigation Strategy must include the following details:

- the purpose and conservation objectives for the proposed Skylark nest plots;
- a detailed methodology for the Skylark nest plots following Agri-Environment Scheme option: 'AB4 Skylark Plots';
- locations of the Skylark nest plots shown on appropriate maps and/or plans; and
- the persons or body responsible for implementing the Skylark Mitigation Scheme
- the timescale for retention and any long term management.

7) Prior to the implementation of the soft landscape scheme and biodiversity mitigation and enhancement measures, a Landscape and Biodiversity Management Plan (LBMP) must be submitted to and approved in writing by the local planning authority. The LBMP must include details of the following:

- the landscape and biodiversity features, including public rights of way corridors, to be maintained and managed;
- measures to prevent harm to the Debden Green Special Roadside Verges;
- biodiversity constraints on site that may influence maintenance and management;
- a maintenance and management plan, setting out the aims and objectives for management of the site and how those aims and objectives will be achieved;
- a work schedule, including an annual work plan capable of being carried forward over a five-year period;
- a monitoring plan, setting out how any remedial action will be identified, agreed and actioned and measures for ongoing monitoring and remedial action as required;

- the body or organisation responsible for implementation of the maintenance and management plan, work schedule and monitoring plan, including a point of contact; and
- the funding mechanism by which the maintenance and management plan, work schedule and monitoring plan will be secured.

The details must be implemented as approved.

8) Prior to the commencement of the development details of any external lighting to be used in the operational phase of the development, including measures to minimise impacts on biodiversity (including bats), must be submitted to and approved in writing by the local planning authority. The details must be implemented as approved.

9) Prior to the commencement of the construction of the Battery Energy Storage System (BESS), a Battery Safety Management Plan (BSMP), including a Fire Safety and Emergency Response Plan, must be submitted to, and following consultation with Essex County Council Fire and Rescue Service and the Health and Safety Executive, approved in writing by the local planning authority. The BESS shall be constructed and operated in accordance with the approved BSMP.

10) Prior to the commencement of the development, a Construction Traffic Management Plan (CTMP) must be submitted to, and following consultation with the highway authority, approved in writing by the local planning authority. The plan must be in accordance with the principles of the CTMP submitted as part of the planning application (September 2021, Rev A) and must include details of the following:

- construction traffic access routing to the site;
- site access arrangements;
- swept paths and visibility splays at the site accesses;
- the types of construction vehicles accessing the site and vehicle frequency;
- investigations of the feasibility to utilise existing hedgerow gaps within the site to accommodate temporary construction access routes;
- temporary construction access routes within the site;
- arrangements for construction worker parking;
- traffic management measures;
- temporary highway signage;
- measures for protection, maintenance and management of the public rights of way (PRoW) network during construction, including a plan showing the position and widths of PRoW, proposed crossing points, use of banksmen, signage, fencing, gates and how surfaces will be protected and maintained at crossing points to ensure the safety and convenience of users of the PRoW network; and
- Pre- and post-construction conditions surveys of the public highway network shown on Figure 5 plan ref. P20-1298 of the CTMP (September 2021, Rev A), including the public highway

adjacent to the southern operational access and structure 2160 Waterhall Bridge and the PRoW network affected by the development.

The approved CTMP must be implemented as approved throughout the construction phase of the development.

11) Prior to the commencement of development, the pre-construction highway condition survey detailed within the approved CTMP (Condition 11), must be completed in conjunction with the highway authority and the results of the survey submitted to and approved in writing by the local planning authority.

Following the completion of the construction phase of the development, the post-construction condition survey detailed within the approved CTMP must be completed in conjunction with the highway authority and the results of the survey submitted to and approved in writing by the local planning authority. Any repair works identified by the approved post-construction survey must be carried out within 3 months of the completion of the construction phase of the development to a programme agreed with the local planning authority.

12) Construction traffic and delivery vehicles must be programmed to arrive and depart outside the peak hours of 07:30 – 09:30 and 16:30 – 18:30 Monday to Thursday and 07:00 – 15:00 on Fridays (to avoid market day in Thaxted).

13) No unbound material must be used in the surface treatment of the vehicular accesses within 16 metres of the public highway boundary.

14) Prior to commencement of development, a Construction Environmental Management Plan (CEMP) must be submitted to and approved in writing by the local planning authority. The CEMP must include details of the following.

- the contact details for the appointed contractor;
- the construction programme;
- biodiversity protection measures, including the identification of 'biodiversity protection zones', the roles and responsibilities of an Ecological Clerk of Works or other similarly competent person(s);
- watercourse pollution protection measures;
- surface water drainage measures including a scheme to minimise the risk of offsite flooding caused by surface water runoff and groundwater during construction works;
- noise, dust and pollution control measures, including monitoring and recording;
- the location of construction compound(s); construction worker welfare facilities and laydown and materials storage;
- construction fencing, hoardings and screenings;
- construction lighting, including measures to minimise impacts on biodiversity (including bats)
- site signage

- wheel wash facilities and any other measures to keep the public highway clear of dirt and debris;
- the contractor's membership of the Consideration Contractors Scheme; and
- a complaints procedure, including point of contact and how complaints will be recorded and responded to.

The approved CEMP must be implemented as approved throughout the construction phase of the development.

15) Construction work must only take place between the hours of 0800 to 1800 Monday to Friday and 0800 to 1300 on Saturdays and a no time on Sundays, Bank or Public Holidays.

16) Upon completion of the construction phase of the development, the temporary construction accesses detailed within the approved CTMP must be permanently closed and any crossings of public rights of way (PRoW) removed and those sections of the PRoW reinstated. The details must be agreed in writing with the local planning authority and implemented as approved prior to the first commercial export of electricity from the development to the electricity grid network.

17) Prior to the commencement of the development, the construction access from Bolford Street, shown on Figure 1 plan ref. P20-1298 Rev A of the CTMP (September 2021, Rev A) , and entirely separate from public right of way (ProW) 49/14, must be provided, including a minimum 6 metre width, 10 metre radii and clear to ground visibility splays with dimensions of 2.4 metres by 215 metres in both directions, as measured from and along the nearside edge of the carriageway in addition to an appropriate dropped kerb vehicular crossing of the highway verge. The visibility splays shall be retained free of any obstruction thereafter. A minimum 2 metres effective width of ProW 49/14 to the public highway must be maintained.

Upon completion of the construction phase of the development, the construction access from Bolford Street must be reduced to a size appropriate for the operational phase of the development, including maintenance and access by emergency vehicles and incorporate the reinstatement to full height of the highway verge. The details must be agreed in writing by the local planning authority, following consultation with the highway authority, prior to completion of the construction phase of the development. The details shall be implemented as approved prior to the first commercial export of electricity from the development to the electricity grid network.

18) Prior to the first commercial export of electricity from the development to the electricity grid network, details of the operational access from the unnamed single track road leading to Richmonds in the Wood to Development Zone 6 (shown on Development Zones Plan ref. LCS023-DZ-02 Rev 09) (also referred to as the southern operational access), must be submitted to the local planning authority for approval in writing. The details must include investigations of the feasibility to utilise existing hedgerow gaps along the unnamed single track leading to Richmonds in the Wood to accommodate the southern operational access. The southern operational access must include a minimum 4.9 metre width, 6

metre radii and clear to ground visibility splays, as measured from and along the nearside edge of the carriageway, in addition to an appropriate vehicular crossing of the highway verge. The visibility splays shall be retained free of any obstruction thereafter.

19) Any gates provided at the Bolford Street access shall be inward opening only and shall be set back a minimum of 16 metres from the back edge of the carriageway. Any gates provided at the southern operational access shall be inward opening only and shall be set back a minimum of 8 metres from the back edge of the carriageway.

20) Prior to the commencement of the development, a public rights of way (PRoW) management plan must be submitted to and approved in writing by the local planning authority. The PRoW management plan must include the following details:

- the definitive widths of the PRoW within the site;
- the 10 metre wide PRoW corridors within the site;
- the boundary planting either side of the definitive widths of the PRoW (the new boundary planting adjacent to the PRoW must be planted a minimum of 3.5 metres back from the definitive width of the PRoW) and how this will be maintained;
- how any vehicular crossing points of the PRoW within the site will be treated to provide priority and safe crossing for users of the PRoW and the surface protected and maintained to a suitable level for the safe and convenient use.

The approved details must be implemented throughout the operational phase of the development.

21) Prior to the commencement of the development, an Archaeological Management Plan (AMP) must be submitted to and approved in writing by the local planning authority. The AMP must include the following details:

- a programme and methodology of site investigation and recording of any archaeological deposits;
- an assessment of their significance;
- a programme for post-investigation assessment;
- the provision to be made for analysis of the site investigation and recording;
- the provision to be made for publication and dissemination of the analysis and records of the site investigation;
- the provision to be made for archive deposition of the analysis and records of the site investigation;
- a competent person or persons/organisation to undertake the works set out within the AMP.

The development must be carried out in accordance with the approved AMP.

22) Prior to the commencement of the development, a detailed surface water drainage scheme, based on sustainable drainage principles and an assessment of the hydrological and hydrogeological context of the site,

must be submitted to and approved in writing by the local planning authority. The scheme must include but not be limited to the following:

- verification of the suitability of infiltration of surface water for the development. This should be based on infiltration tests that have been undertaken in accordance with BRE 365 testing procedure and the infiltration testing methods found in Chapter 25.3 of The CIRIA SuDS Manual C753;
- provide check dams in the proposed swales to promote site infiltration and reduce the risk of flooding in the downstream watercourse;
- limit discharge rates to 1:1 Greenfield runoff rates for all storm events up to and including the 1 in 100 year rate plus 40% allowance for climate change;
- provide sufficient storage to ensure no offsite flooding as a result of the development during all storm events up to and including the 1 in 100 year plus 40% climate change event;
- demonstrate that all storage features can half empty within 24 hours for the 1 in 30 plus 40% climate change critical storm event. In case the drain down time is more than 24 hours then demonstrate that features are able to accommodate a 1 in 10 year storm event within 24 hours of a 1 in 30 year event plus climate change;
- final modelling and calculations for all areas of the drainage system; and
- provide an updated written report summarising the final scheme and highlighting any minor changes to the scheme.

The scheme must be implemented as approved upon completion of the construction phase of the development.

23) Prior to commencement of the works to form the balancing pond to the north-west of Waterhall Farm shown on plan ref. P20-1298 Rev 003 (Proposed Pond Location), a Bird Hazard Management Plan, including a landscape plan to deter birds, must be submitted to and approved in writing by the local planning authority, in consultation with Stansted Airport. The development must be carried out in accordance with the approved plan.

24) Prior to the commencement of the development, a noise survey must be undertaken to establish the typical existing background noise level at the site. The scope of the noise survey and the survey locations, including Noise Sensitive Receptors (NSRs), must be agreed in writing by the local planning authority prior to the survey being undertaken. The survey results must be submitted to the local planning authority prior to the commissioning and testing of the development.

Any fixed plant, including inverters, batteries, generators and transformers, must be operated so that the noise level at the boundaries of the agreed NSRs achieves a rating level of 5dB (LAeq) below the typical existing background level (inclusive of any penalty for tonal, impulsive, low frequency or other distinctive acoustic characteristics) when measured or calculated according to the provisions of

BS4142:2019. The measurement parameters must include the LA90, LAeq, LA Max and 1:1 frequency analysis, and appropriate corrections shall apply in accordance with BS4142:2019 or any subsequent update to this standard or new standard.

Should any item of plant fail to comply with the above rating level, it must be switched off and not used again until it is able to comply. The use of the item of plant must not re-commence until a fully detailed noise survey and report has been submitted to and approved in writing by the local planning authority and approved mitigation measures such as acoustic screening or silencers have been implemented. The item of plant must be serviced in accordance with manufacturer's instructions and as necessary to ensure that the requirements of this condition are maintained at all times.

25) Prior to any site clearance, or the commencement of the development, a Soil Management Plan (SMP) must be submitted to and approved in writing by the local planning authority. The SMP shall be prepared by a suitably qualified soils and agriculture expert. All development and site clearance shall be carried out in accordance with the approved SMP. Before decommissioning commences, the expert should review the SMP and make recommendations as to measures necessary to ensure the land is restored to its original condition at decommissioning, taking into account any updates in statutory or policy requirements.

The following details must be included in the SMP:

- soil resource survey;
- site preparation;
- details of the handling and storage of soils during the construction, operational and decommissioning phases;
- import of construction materials, plant and equipment to Site;
- establishment of Site construction compounds and welfare facilities;
- cable installation;
- temporary construction compounds;
- trenching in sections;
- upgrading existing tracks and construction of new access tracks and roads within the Site;
- the upgrade or construction of crossing points (bridges /culverts) at drainage ditches within the Site;
- appropriate storage, capping and management of soil;
- appropriate construction drainage;
- sectionalised approach of duct installation;
- excavation and installation of jointing pits;
- cable pulling;
- testing and commissioning;

- site reinstatement (i.e. returning any land used during construction, for temporary purposes, back to its previous condition);
- use of borrow pits;
- review of Soil Management Plan at end of project life;
- restoration of land to an approved quality at the end of the site's operation; and
- arrangements for the supervision of the SMP.

The SMP must be implemented as approved.

26) Prior to the development permanently ceasing the commercial export of electricity to the electricity grid network or this planning permission ceasing, whichever is sooner, a Decommissioning Method Statement (DMS) must be submitted to the local planning authority for approval in writing. The DMS must include the following details:

- proposals for the removal of the solar arrays, inverters, batteries, DNO substation, access tracks, CCTV cameras, fencing, and other associated infrastructure from the site and a programme for the carrying out and completion of those works;
- proposals for the restoration of the site and a programme for carrying out and completing those works;
- a Decommissioning Environmental Management Plan; and
- a Decommissioning Transport Management Plan.

The development must be decommissioned in accordance with the approved DMS within 12 months of the development permanently ceasing the commercial export of electricity to the electricity grid network or the planning permission ceasing, whichever is sooner.

27) The development hereby permitted must cease 40 years from the first commercial export of electricity from the development to the electricity grid network. For the avoidance of doubt this excludes electricity exported during initial testing and commissioning of the development. Written confirmation of the first commercial export of electricity from the development to the electricity grid network must be provided to the local planning authority no later than 30 days after the event.

APPEARANCES

FOR THE APPELLANT:

Michael Humphries KC	Instructed by Geoff Bullock of DWD LLP, acting on behalf of Cutlers Solar Farm Limited
He called:	
Will Gardner BSc(Hons) MSc CLMI	EDP
Nathan Blick MCIfA	Cotswold Archaeology
Tony Kernon BSc(Hons) MRICS FBIAC	Kernon Countryside Consultants Ltd
Geoff Bullock BA(Hons) BPI MRTPI	DWD LLP

FOR THE LOCAL PLANNING AUTHORITY:

Harriet Townsend, of Counsel and Olivia Davies, of Counsel	Instructed by Maria Shoesmith, Uttlesford District Council Strategic Applications Team Leader
They called:	
Peter Radmall MA BPhil CMLI	Landscape Consultant
Caroline Sones	Senior Built Heritage Consultant, Place Services
Sam Frankliln BSc(Hons) MSc MRICS FAAV FBIAC MISoilSci	Landscope Land and Property
Maria Shoesmith MRTPI	Strategic Applications Team Leader, Uttlesford District Council

FOR THAXTED PARISH COUNCIL:

James Smith	James Smith (Planning Law Services) Ltd
He called:	
Jaquelin Clay BSc MSc CMLI FAE	JFA Environmental Planning
Joanna Burton MPhil MSt BA(Hons) MRTPI IHBC	JB Heritage Consulting Ltd
Victoria Knight & Professor Michael Alder	Agricultural land
Richard Haynes	Policy

INTERESTED PERSONS:

Dr Chris Smith	Ducketts Farm
Trina Mawer	Farmer Jacks, 15 Newbiggen Street
Katherine Siddle	Richmonds in the Wood
Adrian Temple	Pinewood Farm
James Mizen	Loves Farm
Dr Sarah Smith	Ducketts Farm

DOCUMENTS

INQ1	Appellant's Opening Statement
INQ2	Council's Opening Statement
INQ3	Parish Council's opening statement
INQ4	Trina Mawer's statement
INQ5	Katherine Siddle's statement
INQ6	Consolidated schedule of viewpoints, Peter Radmall for Council
INQ7	Council note of detail of instructions
INQ8	Appellant note of detail of instructions
INQ9	Appellant memo on capacity of Site
INQ10	Appellant memo on Site area
INQ11	Landscape strategy Plan Rev C
INQ12	Planting Strategy with revisions (superseded by INQ14)
INQ13	Amended constraints plan
INQ14	Landscape strategy summary of changes (based on Planning drawing P20-1298_09 Rev C),
INQ15	Appellant verified views, Document Reference No. V3D 230307
INQ16	Inspector Site Visit Plan, drawing number edp7983_d011a
INQ17	Inspector Site Visit Plan (Spriggs and Terriers Farm), drawing number edp7983_d012a
INQ18	Council annotated plot numbers on tithe map
INQ19	Defra Press release, 06 December 2022
INQ20A	Council, Revised Annotated OS Map 7
INQ21	Appeal Ref: APP/H1705/W/22/3304561- Minchens Lane, Bramley, Hampshire
INQ22	DCO, Little Crow Solar Park, Ref 010101
INQ23	DCO, Longfield Solar Farm, Ref 010118
INQ24	Appellant, Revised Note on Agricultural Land Classification
INQ25	Protect the Pelhams v SSLUHC, UDC, Berden Solar Limited Consent Order
INQ26	Council, Speech of Rt Hon Gregory Barker, 25 April 2013
INQ27	Council, Application UTT/22/0007/FUL, Land East of School Road and Main Road, 5 September 2023
INQ28	Parish Council, Claire Coutinho 2023 Speech to Conservative Party Conference, 02/10/2023
INQ29	James Mizen's statement
INQ30	Dr Sarah Smith's statement
INQ31	Pegasus Letter, June 2022
INQ32	Parish Council Closing Submissions

INQ33	Council Closing Submissions
INQ34	Appellant Closing Submissions

PLANS

West Thaxted Development Zone Plan 2	LCS023 DZ-02 Rev 09
West Thaxted Indicative Site Layout External	LCS023 PLE-01 Rev 13
West Thaxted Constraints Plan	LCS023 CP-02 Rev 02
Landscape Strategy Summary of Changes (Based on Planning dwg P20-1298-09 Rev C)	

Plans

Plan EDP 1: Extended Phase 1 Habitat Plan
(edp7926_d012 22 November 2023 GYo/JGw)

Plan EDP 2: Landscape and Ecology Strategy Plan
(edp7927_d010d 12 March 2024 JFr/TRa)

Plan EDP 3: Pre-development Habitat Plan
(edp7927_d013b 18 March 2024 GYo/JGw)

Plan EDP 4: Post-development Habitat Plan
(edp7927_d014c 15 March 2024 GYo/JGw)

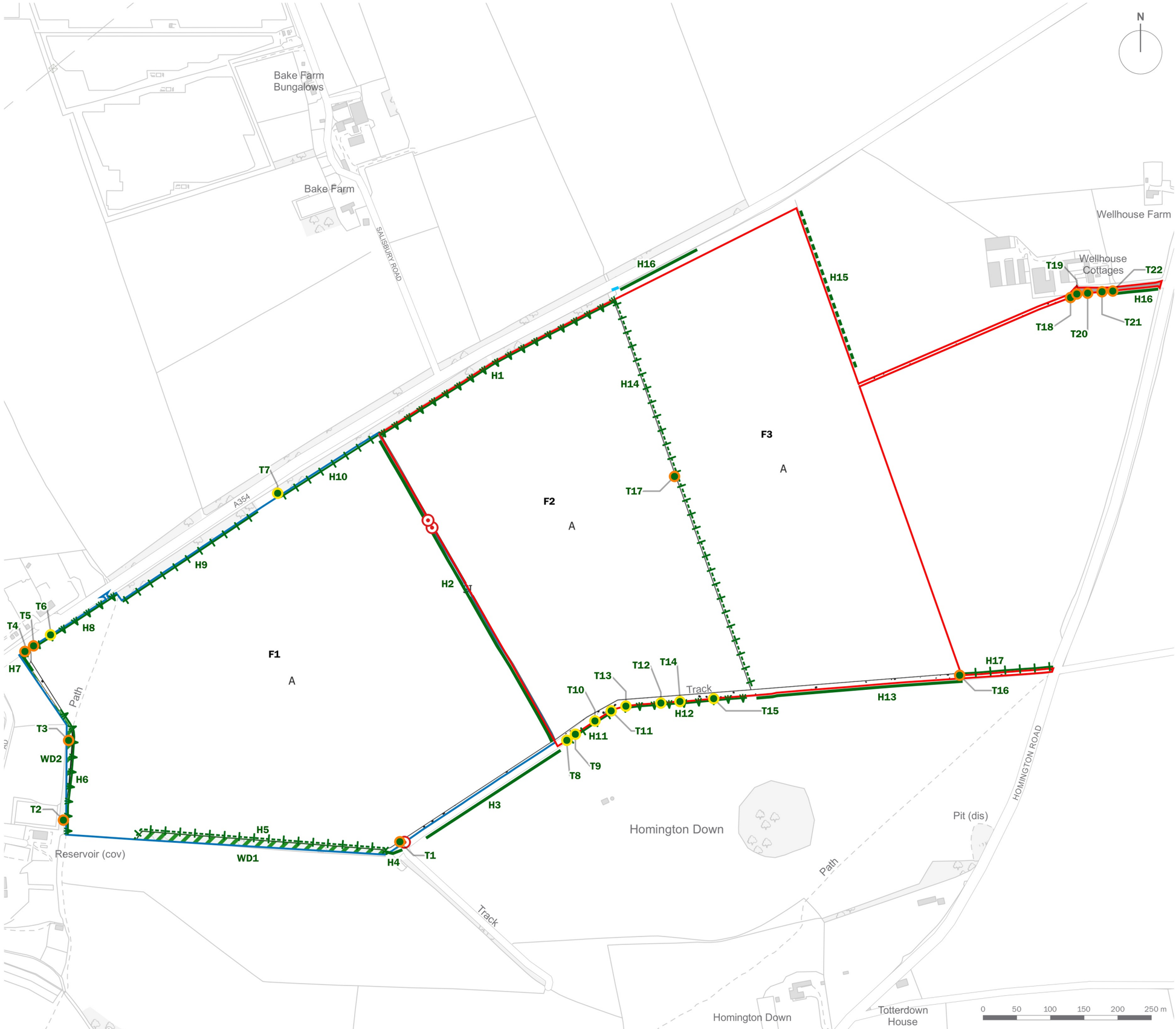

Site Boundary

Study Area

Broadleaved Plantation Woodland

Scattered Scrub

Scrub and Tall Ruderal

A — Arable

SI — Poor Semi-improved Grassland

Hardstanding

Bare Ground

Intact Species-rich Hedgerow and Trees

Intact Species-poor Hedgerow and Trees

Intact Species-poor Hedgerow

Defunct Species-poor Hedgerow and Trees

Defunct Species-poor Hedgerow

Dry Ditch

Tree with Moderate Bat Roost Potential

Tree with Low Bat Roost Potential

Target Note

F1 — Field Number

WD1 — Woodland Number

H1 — Hedgerow Number

T1 — Tree Number

client
Low Carbon

project title
Beech Tree Solar Farm, Salisbury

drawing title
Extended Phase 1 Habitat Plan

date	**22 NOVEMBER 2023**	drawn by	**GYo**
drawing number	**edp7926_d012**	checked	**JGw**
scale	**1:5,500 @ A3**	QA	**DJo**

the environmental dimension partnership
Registered office: 01285 740427 - www.edp-uk.co.uk - info@edp-uk.co.uk

© The Environmental Dimension Partnership Ltd. © Crown copyright and database rights 2023 Ordnance Survey 0100031673

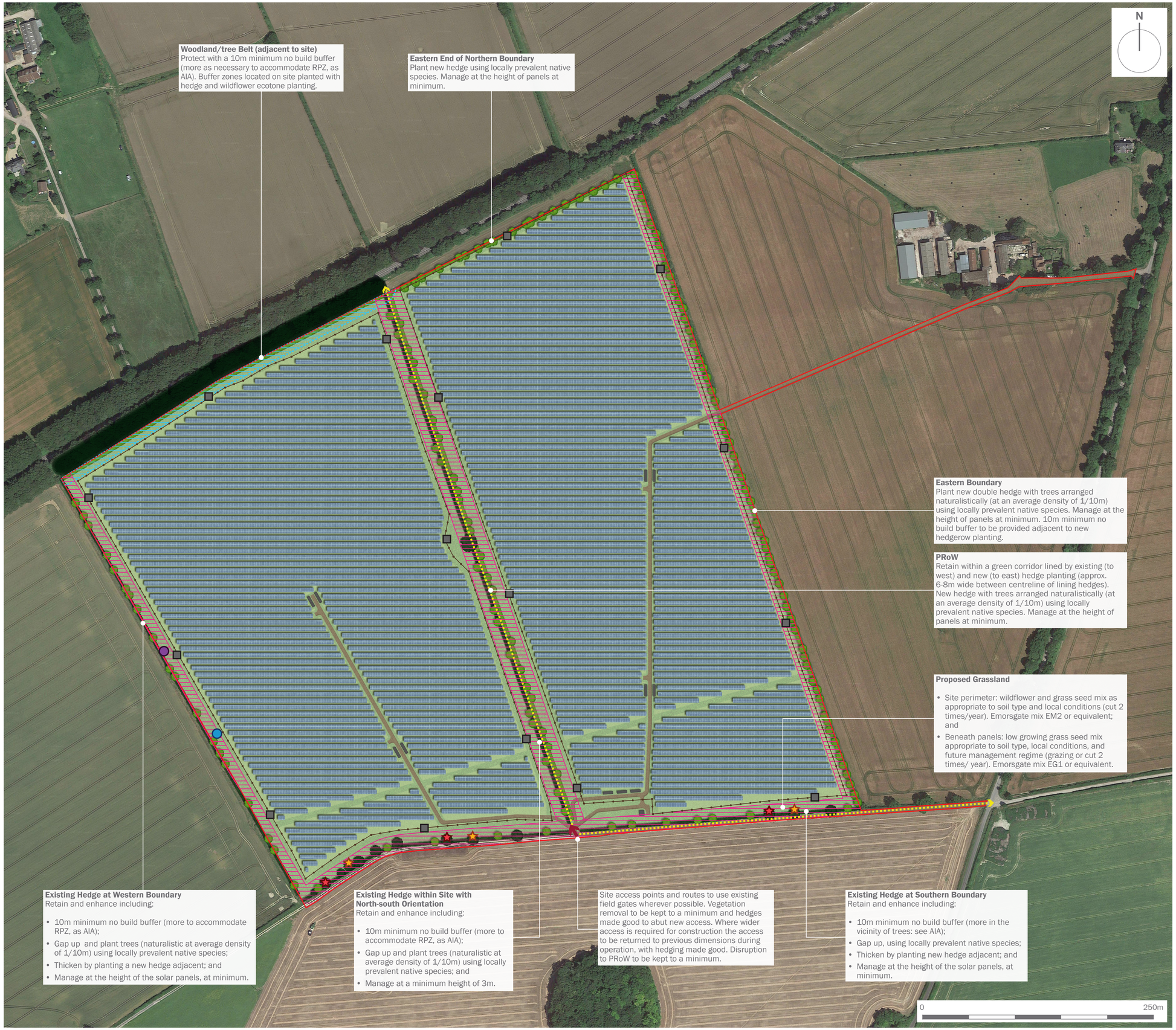

Site Boundary

Solar Arrays

Development Infrastructure (Access Tracks, DNO and Customer Substations, Inverters and Cameras)

Security Fencing

Site Access

Existing Woodland (Offsite Adjacent) to be Retained and Protected

Existing Hedgerows to be Retained, Protected and Enhanced

Proposed Hedgerow with Trees

Existing Public Right of Way Retained

Existing Woodland 10m Buffer

Hedgerow 10m Buffer

Bat Boxes

Bird Boxes

Mammal Gates

Reptile Hibernacula

Reptile Refugia

Further Considerations:

Lighting: minimise artificial lighting where possible and, where required, minimise light spill through the use of timers and directional lighting.

client

Low Carbon

project title

Beech Tree Solar Farm, Salisbury

drawing title

Landscape and Ecology Strategy Plan

date	**12 MARCH 2024**	drawn by	**JFr**
drawing number	**edp7926_d010d**	checked	**TRa**
scale	**1:2,000 @ A1**	QA	**RBa**

the environmental dimension partnership

Registered office: 01285 740427 - www.edp-uk.co.uk - info@edp-uk.co.uk

© The Environmental Dimension Partnership Ltd. Imagery © 2023 Getmapping plc, Map data © 2023 Google United Kingdom

Habitat	Condition	Area (Ha)
Bare Ground	Poor	0.766
Cereal Crops	Condition Assessment N/A	20.282
Modified Grassland	Poor	0.099
Bramble Scrub	Condition Assessment N/A	0.004
Temporary Grass and Clover Leys	Condition Assessment N/A	19.218
Developed Land; Sealed Surface	Condition Assessment N/A	0.078
Rural Tree	Good	0.183
Hedgerow	**Condition**	**Length (Km)**
Native Hedgerow	Good	0.129
Native Hedgerow with Trees	Good	0.079
Native Hedgerow with Trees	Moderate	0.607
Native Hedgerow	Good	0.823
Native Hedgerow	Good	0.25
Species-rich Native Hedgerow with Trees	Good	0.589
Native Hedgerow	Good	0.063
Native Hedgerow with Trees	Moderate	0.137

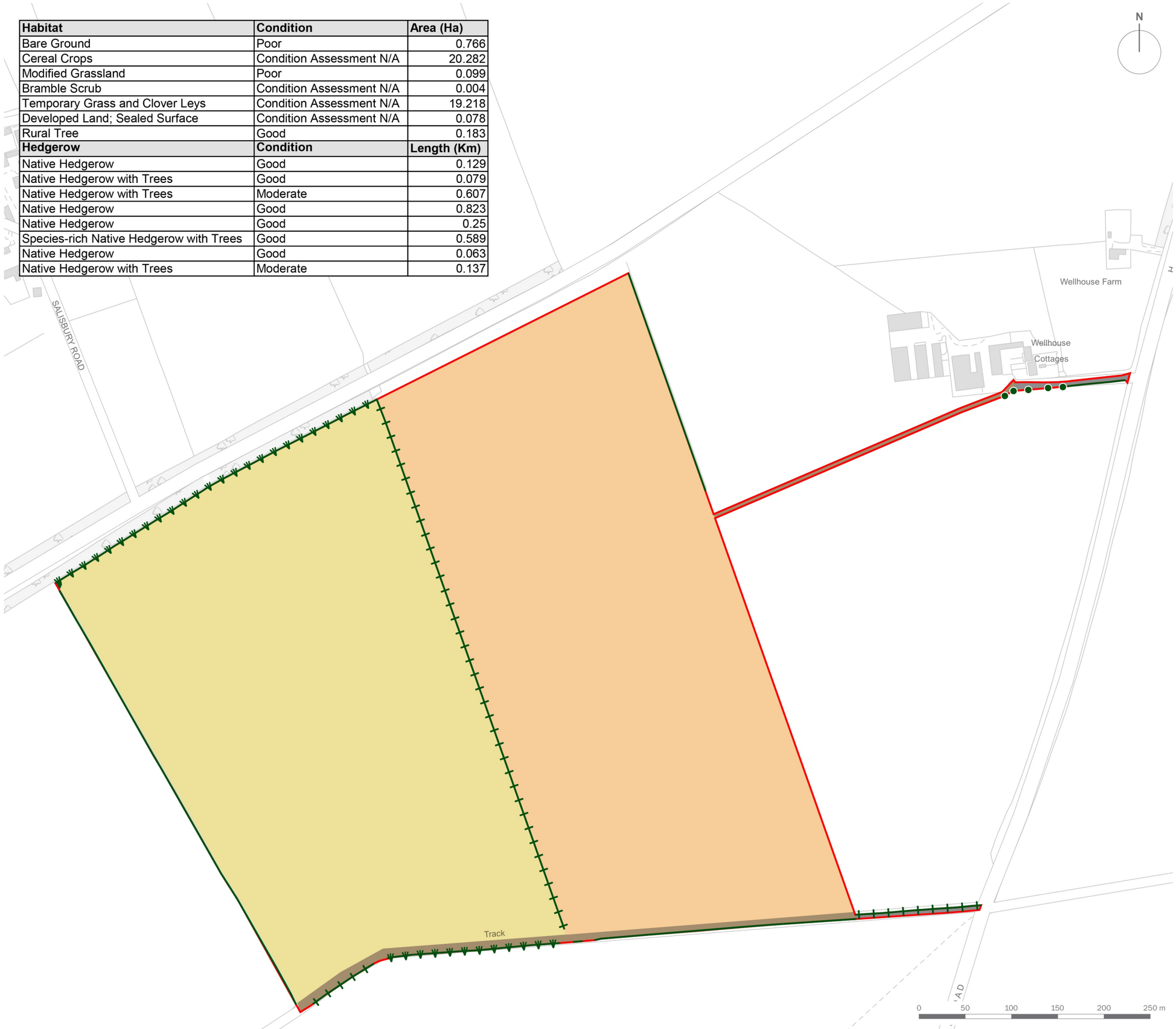

Site Boundary

Bramble Scrub

Cereal Crops

Temporary Grass and Clover Leys

Bare Ground

Developed Land; Sealed Surface

Species-rich Native Hedgerow with Trees

Native Hedgerow with Trees

Native Hedgerow

Existing Medium Rural Tree

client

Low Carbon

project title

Beech Tree Solar Farm, Salisbury

drawing title

Pre-development Habitat Plan

date	**18 MARCH 2024**	drawn by	**GYo**
drawing number	**edp7926_d013b**	checked	**JGw**
scale	**1:4,000 @ A3**	QA	**DJo**

the environmental dimension partnership

Registered office: 01285 740427 - www.edp-uk.co.uk - info@edp-uk.co.uk

© The Environmental Dimension Partnership Ltd. © Crown copyright and database rights 2024 Ordnance Survey 0100031673

Habitat Loss	Condition	Area (Ha)
Bare Ground	Poor	0.530
Cereal Crops	Condition Assessment N/A	20.282
Temporary Grass and Clover Leys	Condition Assessment N/A	19.218
Bare Ground	Poor	0.236
Retained Habitat	**Condition**	**Area (Ha)**
Bramble Scrub	Condition Assessment N/A	0.004
Developed Land; Sealed Surface	N/A - Other	0.078
Rural Tree	Good	0.183
Enhanced Habitat	**Condition**	**Area (Ha)**
Modified Grassland To Other Neutral Grassland	Moderate	0.099
Created Habitat	**Condition**	**Area (Ha)**
Developed Land; Sealed Surface	N/A - Other	4.652
Modified Grassland	Moderate	31.806
Other Neutral Grassland	Poor	3.014
Sustainable Drainage System	Poor	0.625
Bare Ground	Poor	0.170

Hedgerow Loss	Condition	Length (Km)
Native Hedgerow	Good	0.01
Retained Hedgerow	**Condition**	**Length (Km)**
Native Hedgerow	Good	0.129
Native Hedgerow With Trees	Good	0.079
Native Hedgerow	Good	0.812
Species-rich Native Hedgerow With Trees	Good	0.589
Native Hedgerow	Good	0.063
Enhanced Hedgerow	**Condition**	**Length (Km)**
Native Hedgerow With Trees To Species-rich Native Hedgerow With Trees	Good	0.607
Native Hedgerow To Species-rich Native Hedgerow With Trees	Good	0.250
Native Hedgerow With Trees To Species-rich Native Hedgerow With Trees	Good	0.137

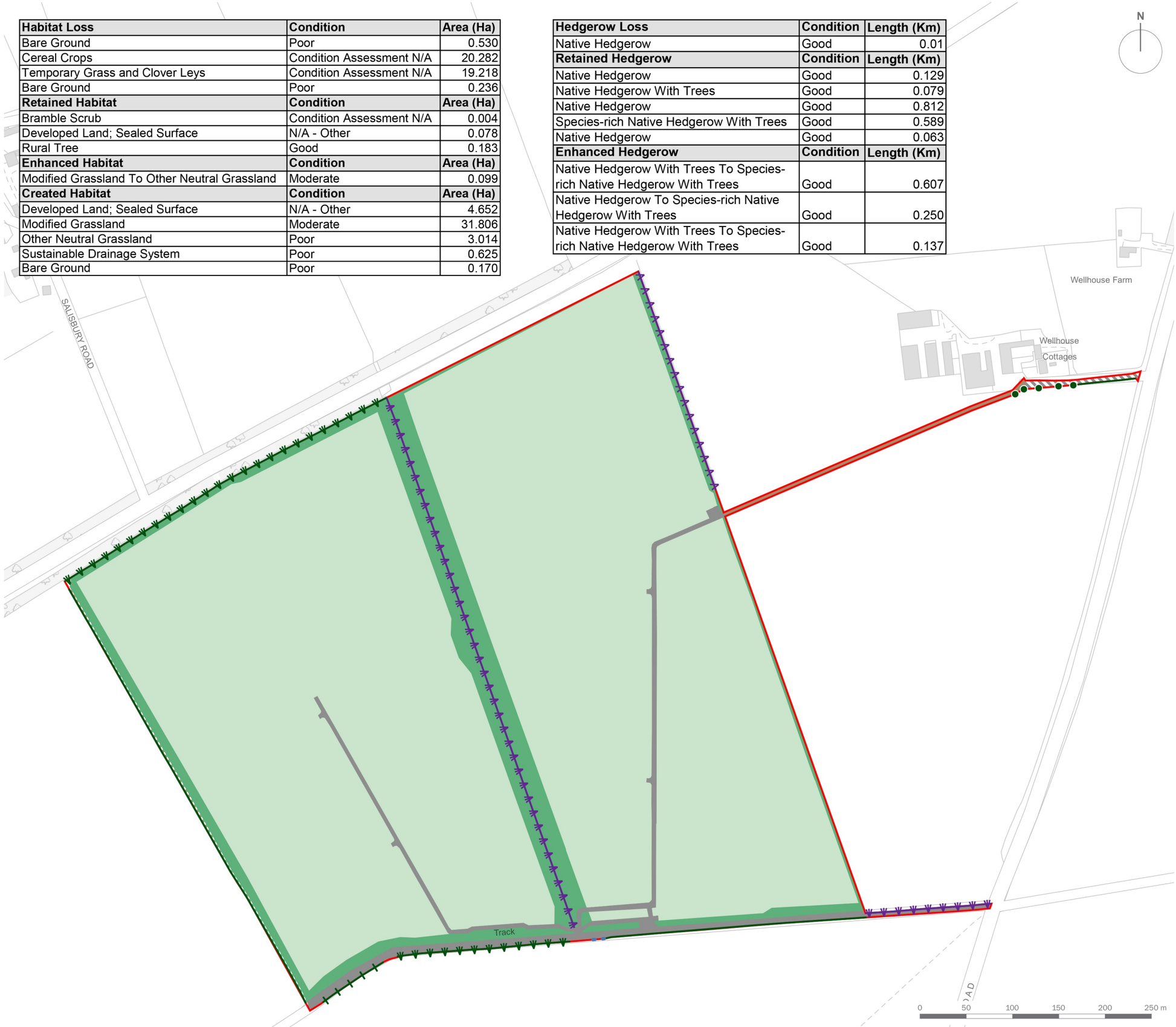

Site Boundary

Habitat Loss

Hedgerow Lost

Retained Habitats

Bramble Scrub

Developed Land; Sealed Surface

Species-rich Native Hedgerow with Trees

Native Hedgerow with Trees

Native Hedgerow

Existing Medium Rural Tree

Enhanced Habitats

Other Neutral Grassland

Species-rich Native Hedgerow with Trees

Species-rich Native Hedgerow

Created Habitats

Other Neutral Grassland

Modified Grassland

Bare Ground

Developed Land; Sealed Surface

client

Low Carbon

project title

Beech Tree Solar Farm, Salisbury

drawing title

Post-development Habitat Plan

date	**15 MARCH 2024**	drawn by	**GYo**
drawing number	**edp7926_d014c**	checked	**JGw**
scale	**1:4,000 @ A3**	QA	**DJo**

the environmental dimension partnership

Registered office: 01285 740427 - www.edp-uk.co.uk - info@edp-uk.co.uk

© The Environmental Dimension Partnership Ltd. © Crown copyright and database rights 2024 Ordnance Survey 0100031673