Notes

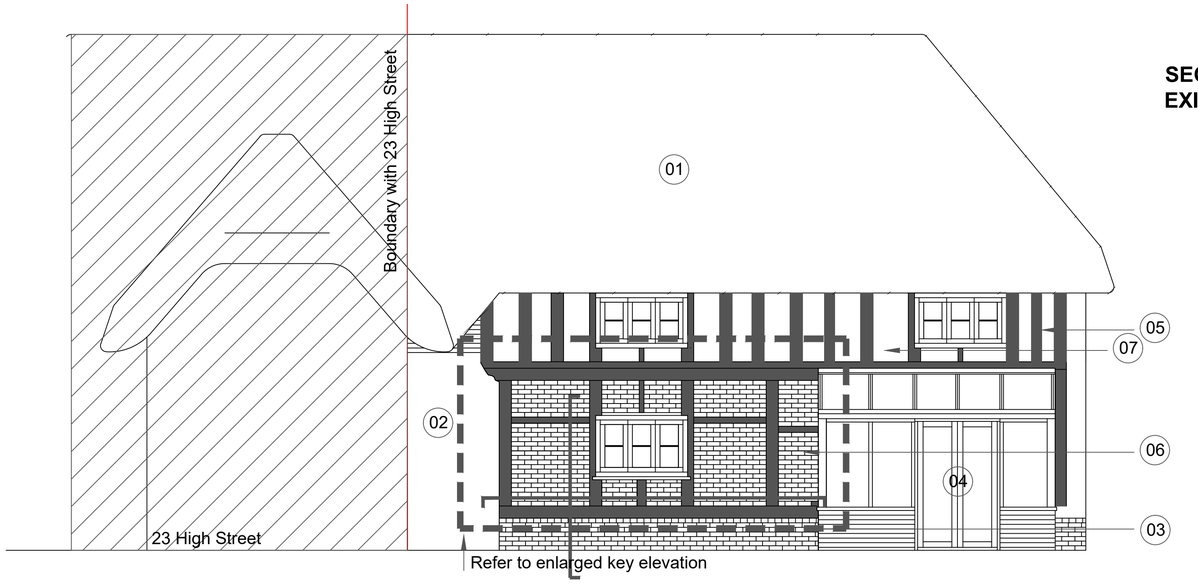

REAR ELEVATION 1:50



ENLARGED ELEVATION TO SHOW WORKS AREA 1:20

Sole plate to be removed and replaced with permanent oak plate

SECTION AA EXISTING 1:10

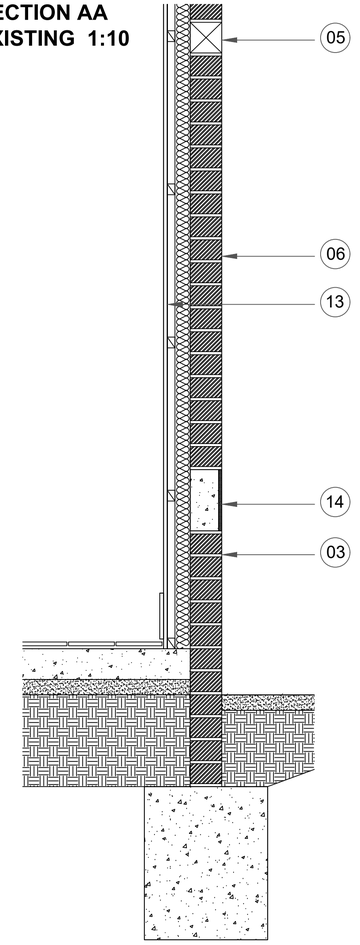

SECTION AA DURING WORKS 1:10

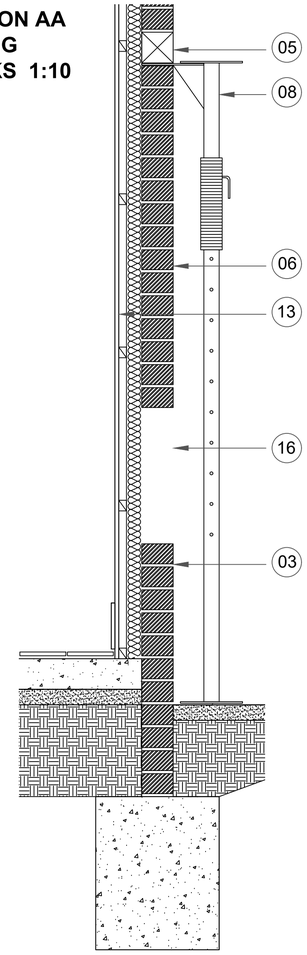

SECTION AA PROPOSED 1:10

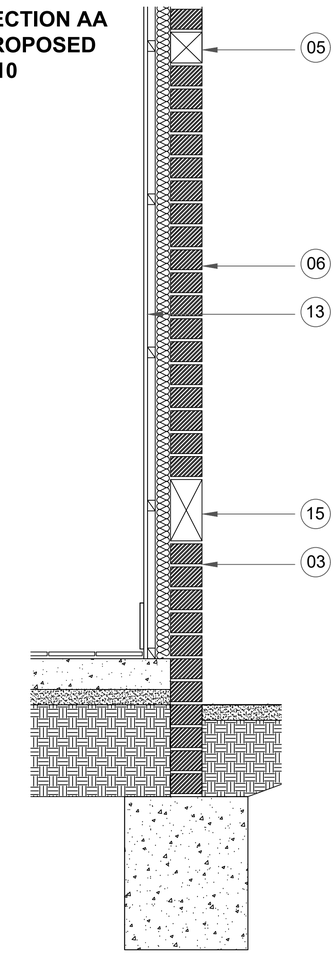

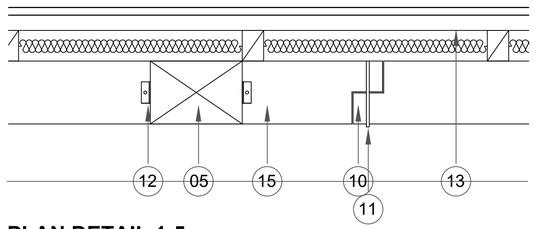

PLAN DETAIL 1:5



Rev	Amendments	By	Chkd	Date

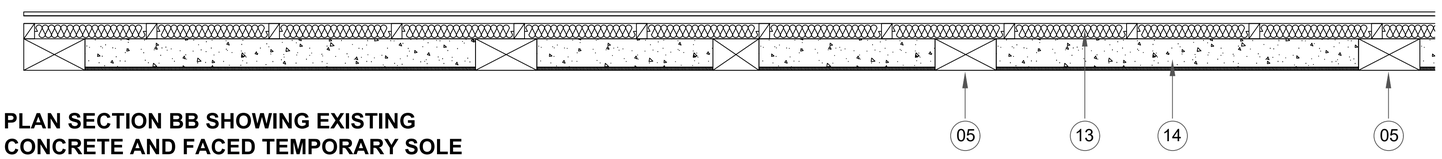

PLAN SECTION BB SHOWING EXISTING CONCRETE AND FACED TEMPORARY SOLE PLATE 1:10

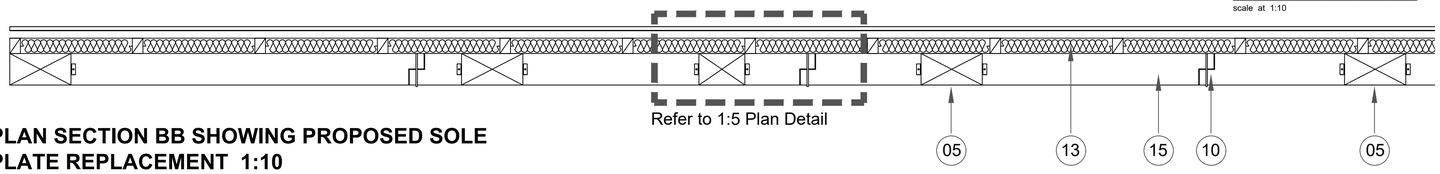

PLAN SECTION BB SHOWING PROPOSED SOLE PLATE REPLACEMENT 1:10

KEY

01 Thatched roof
02 Stone
03 Black painted brick plinth
04 Conservatory
05 Black timber exposed frame
06 White painted brick panels
07 White painted render infill
08 Acrow props with strongboy supports under existing timber frame
09 New black oak sole plate
10 Timber sole plate sections jointed with a half lap detail
11 Oak dowel fixed through half lap joint left with 5mm proud externally
12 Joint between new oak sole plate and timber upright fixed with galvanised angle cramp
13 Existing insulation and dry lining finish internally
14 Existing temporary sole plate made from masonry and sand cement render faced to give timber effect
15 New timber sole plate bedded on an NHL lime mortar with mortar packed above and slate to ensure good fit.
16 Existing sole plate and bricks removed in 800-1000mm sections hit and miss to maintain stablity

Project
22 High Street
Wedhampton

Drawing Title
Planning Submission Detail Drawing
Temporary Sole Plate Removal
Install of new oak sole plate

Drawing Status
For Planning

Scale
Varies

Drawn By	Checked By	Date
GD		Feb 2024

Project No.	Drawing No.	Revision
300	(PL)005	p01