D.01 Door

Location: Ground Floor
No of Units: 1
Type: Door- JELD-WEN Slim Line Heritage Collection Laminated hardwood timber.
Materials: Heritage Collection hardwood timber frames, factory finished in RAL 7016. Forest Stewardship Council® (FSC®) certified. Glazing to satisfy Approved Document K4. Doors to achieve a minimum U value of 1.4w/m²K. PAS 24:2016 met. Inward opening. 28mm toughened argon filled double glazed unit. Energy B rated.
Door Frame: Wood jambs shall be fabricated as a flat jamb with doorstop applied or 2-piece split jamb.Strike jamb preparations are to be machined for full lip cylindrical strike plate. Including all door furniture in brushed stainless steel. Primed from factory and finished on site.Internal laminated glass protection shall be Minimum Class 3 to BS EN 12600 or Class C to BS 6206.

Facade Scale 1:50

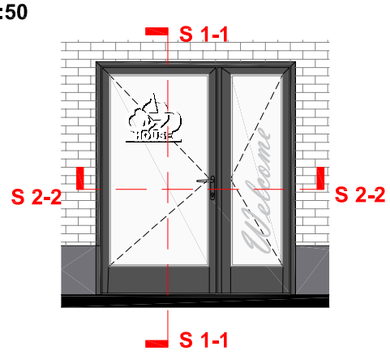

Section 1-1 Scale 1:5

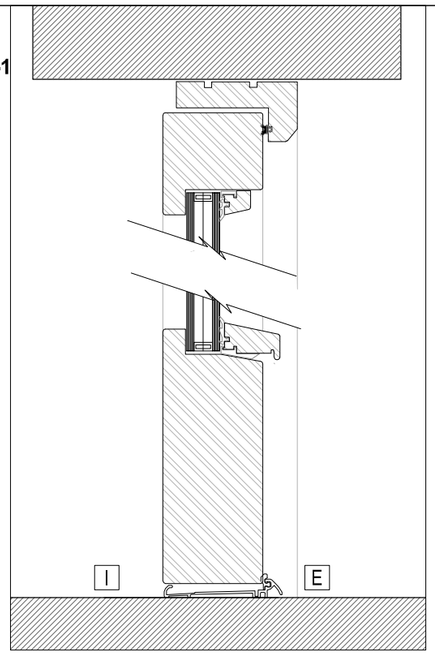

Section 2-2 Scale 1:5

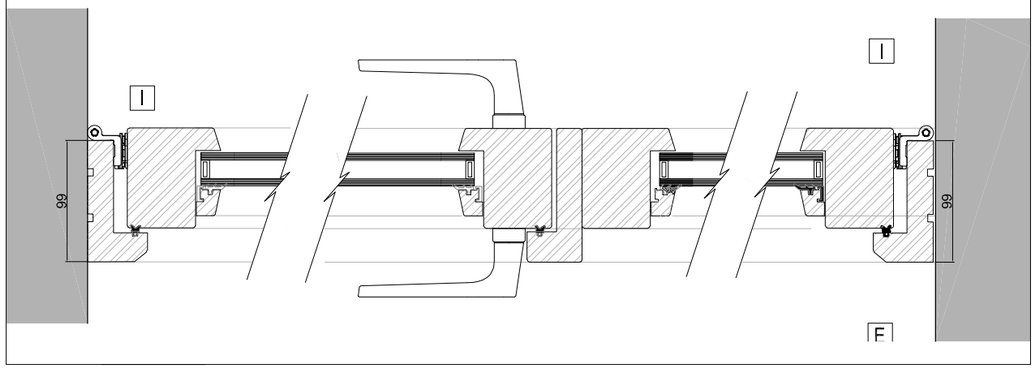

W.01 Window

Location: Ground Floor
No of Units: 1
Type: Window- Fixed double glazed JELD-WEN Slim Line Heritage Collection Laminated hardwood timber.
Materials: Heritage Collection hardwood timber frames, factory finished in RAL 7016. Forest Stewardship Council® (FSC®) certified. 28mm toughened argon filled double glazed unit (complying with the building regulation Part K "Protection from falling, collision and impact"). Energy B rated, thermally broken. Minimum U value of 1.4 W/m2K Internal laminated glass protection shall be Minimum Class 3 to BS EN12600 or Class C to BS 6206.150mm timber cill by window supplier. Minimum U value of 1.4 w/metre sq k.PAS 24:2016 met.

Facade Scale 1:50

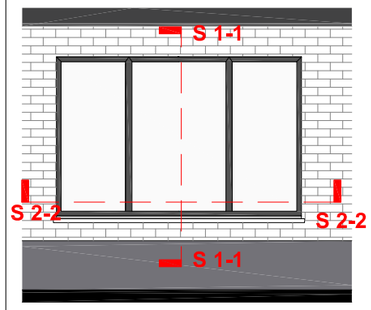

Section 1-1 Scale 1:5

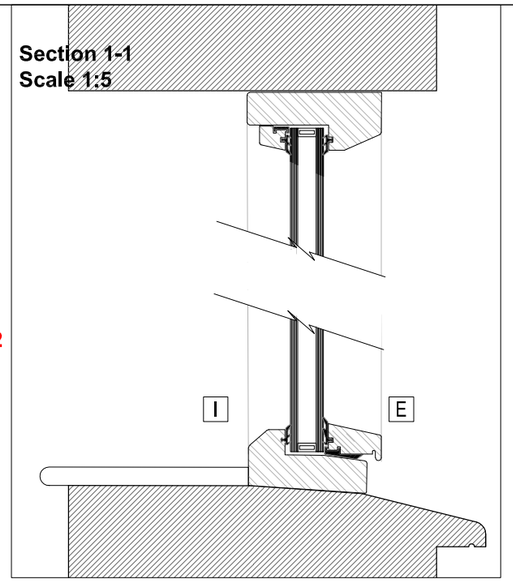

Section 2-2 Scale 1:5

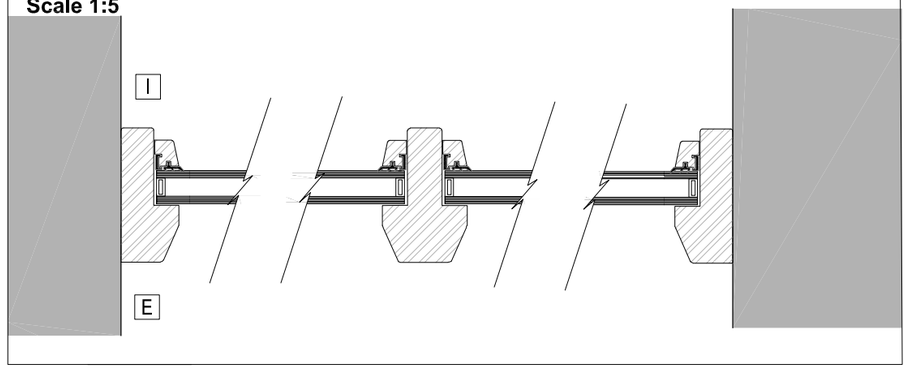

Plan Key

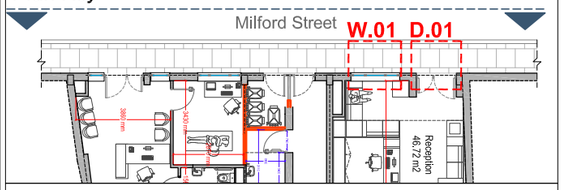

IMPORTANT NOTE:

- ALL DIMENSIONS TO BE CHECKED ONSITE PRIOR TO BUILD OR MANUFACTURE OF ITEMS MADE TO MEASURE.
- DOORS & WINDOWS TO ACHIEVE A MINIMUM U VALUE OF 1.4w/m²K.
- 75% OF NEW LIGHT FITTINGS NEED TO BE ENERGY EFFICIENT.
- SAFETY GLAZING TO BE INSTALLED IN ACCORDANCE WITH BS 6206 REQUIREMENT N1.
- ALL DOOR AND WINDOWS TO BE PAS SECURITY PART Q COMPLIANT.

LEGEND

E Exterior

I Interior

GRAPHIC SCALE (1/5) on A3

0 100 mm 200 mm 300 mm

GRAPHIC SCALE (1/50) on A3

0 1.00 m 2.00 m 3.00 m

north:

scale: **A3: 1 / 5**

important note:
THE AUTHOR OF THE PROJECT, LABOX DESIGN SLP, RETAINS THE COPYRIGHT FOR ALL THE DESIGN WORK AND DOCUMENTATION RELATING TO THE PROJECT, OF WHICH, THIS DRAWING FORMS PART. THE CLIENT MAY COPY AND USE THE DOCUMENTATION ONLY FOR PURPOSES RELATING TO THE ADVANCEMENT AND DEVELOPMENT OF THE PROJECT. ANY OTHER USE WILL REQUIRE THE SPECIFIC PERMISSION OF THE AUTHOR, WHO SHALL NOT BE LIABLE FOR ANY USE OF THE INFORMATION OTHER THAN THAT FOR WHICH THEY WERE ISSUED.

project title:
IMPROVEMENT TO THE FRONT FACADE, INTERNAL ALTERATIONS AND FORMALISING THE USE OF THE FLAT ROOF AS A OUTDOOR BREAKOUT SPACE.

client:
Lucy Beck
i- Dynamics

site:
22-26 Milford Street
Salisbury SP1 2AP

LABOX architecture
Elms Cross Yard, Frome Rd
Bradford on Avon (Wiltshire)
tel. 01225 866269
e-mail: labox@labox.cat
web: www.labox.cat

agent:
Ritu Ale

ref:
617-15

plan title:
PLANS OF PROPOSAL
Window Schedule- D01 & W01

date:
Project date: **MAY 2022**
Revision date: **06/02/2024**

plan N° / revision:
1502 /R4