The Glebe , Gt Cheverall

Existing

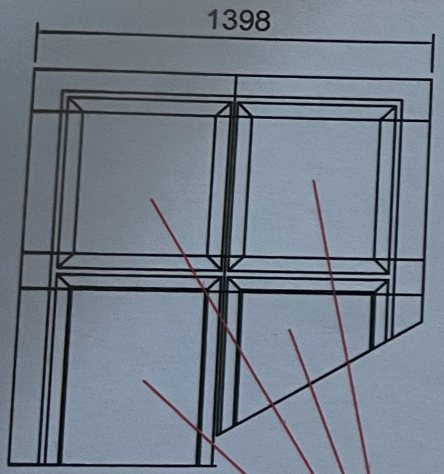

Existing windows blocked up

Proposed

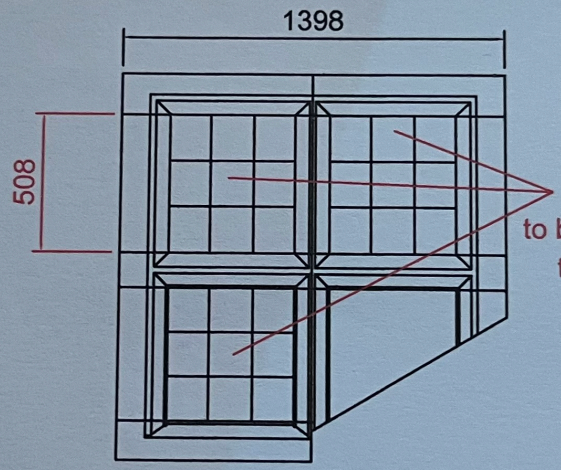

Both upper window lights
and left lower light
to be re-opened up , new steel crittal windows
to be installed , side hung and opening ,
leaded lights to match existing

.

SCALE 1:30
@ A4

