Opening Windows

SW0052-0053 / SW0004-0030 - No Cill

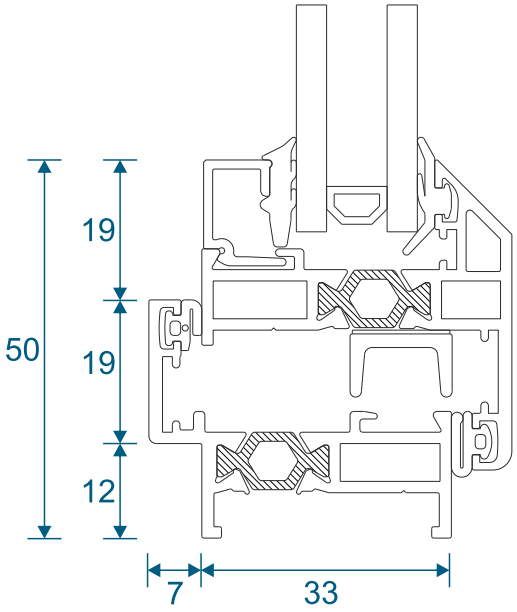

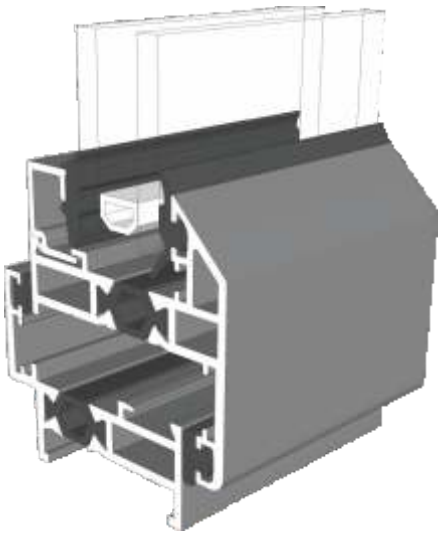

SW0052-0053 / SW0004-0030- With 85mm Cill

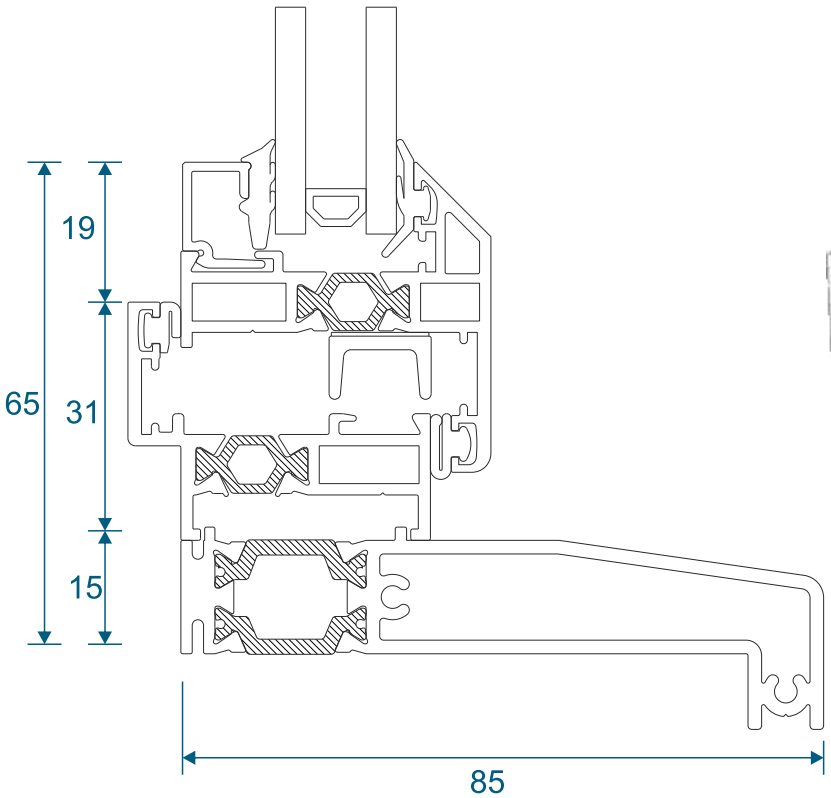

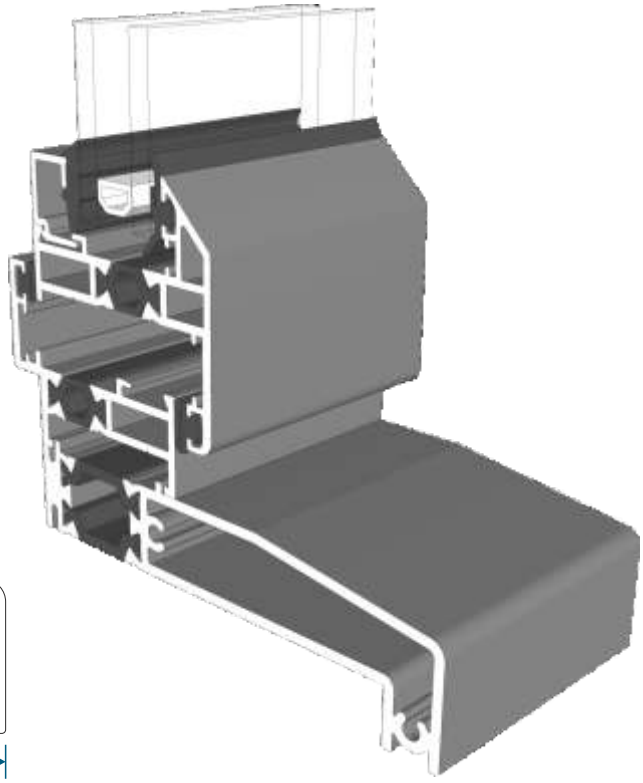

All sizes in millimetres

E.& O.E.