One Step Joinery
for purpose-made staircases and general woodwork

Unit 15, Techno Trading Estate
Bramble Road, Swindon
Wiltshire SN2 8HB
Tel: 01793 524458
Fax: 01793 574806
Email: info@onestepjoinery.co.uk
Website: www.onestepjoinery.co.uk

Suzanne Black
19 London Road
Marlborough
Wiltshire
SN8 1BA

24th January 2024

Dear Suzanne

Please find below revised drawings and notes to support the application for the replacement of 2 No. Front Elevation Sliding Sash Windows – Ground Floor & First Floor.

To be read in conjunction with the notes and drawings sent previously but these details will supersede any previous details.

The first drawing (DRG No. 10) shows some detail changes -

Reduced depth of the box frame to 75mm which is the size of the existing window. This is to keep the sash sizes, and therefore the glass sizes, to the same as the existing window.

Bead mould added to front of outside cheek. To keep the detail as the original window.

Addition of moulding/architrave to outside face. This will be to both upright and across the head of the frame, to match the existing moulding.

These details are also shown on photo No. 01

Existing rotten and general disrepair to first floor window

The photos attached to this document show the poor state of the frames and sashes. The full 50mm of the pen knife disappearing into the frame.

Photo No. 03 shows a poor attempt at past repairs. Also shows the bottom of the sash with no putty and open joints that are rotting away.

One Step Joinery
for purpose-made staircases and general woodwork

Unit 15, Techno Trading Estate
Bramble Road, Swindon
Wiltshire SN2 8HB
Tel: 01793 524458
Fax: 01793 574806
Email: info@onestepjoinery.co.uk
Website: www.onestepjoinery.co.uk

Generally, the window is in such a bad state that to repair the bottom cill and re use the sashes would leave the window open to continued rot and within no time more repairs will be required. By replacing them now, in this way, will preserve the style for the future.

The proposal is to replace both windows, ground floor & first floor, with the design in keeping with the first floor window with these revised details.

Yours sincerely

Mark Foster
Director
For and on behalf of One Step Joinery Limited

DRG N° 10

REVISED WINDOW DETAILS

FULL SIZE AT A4

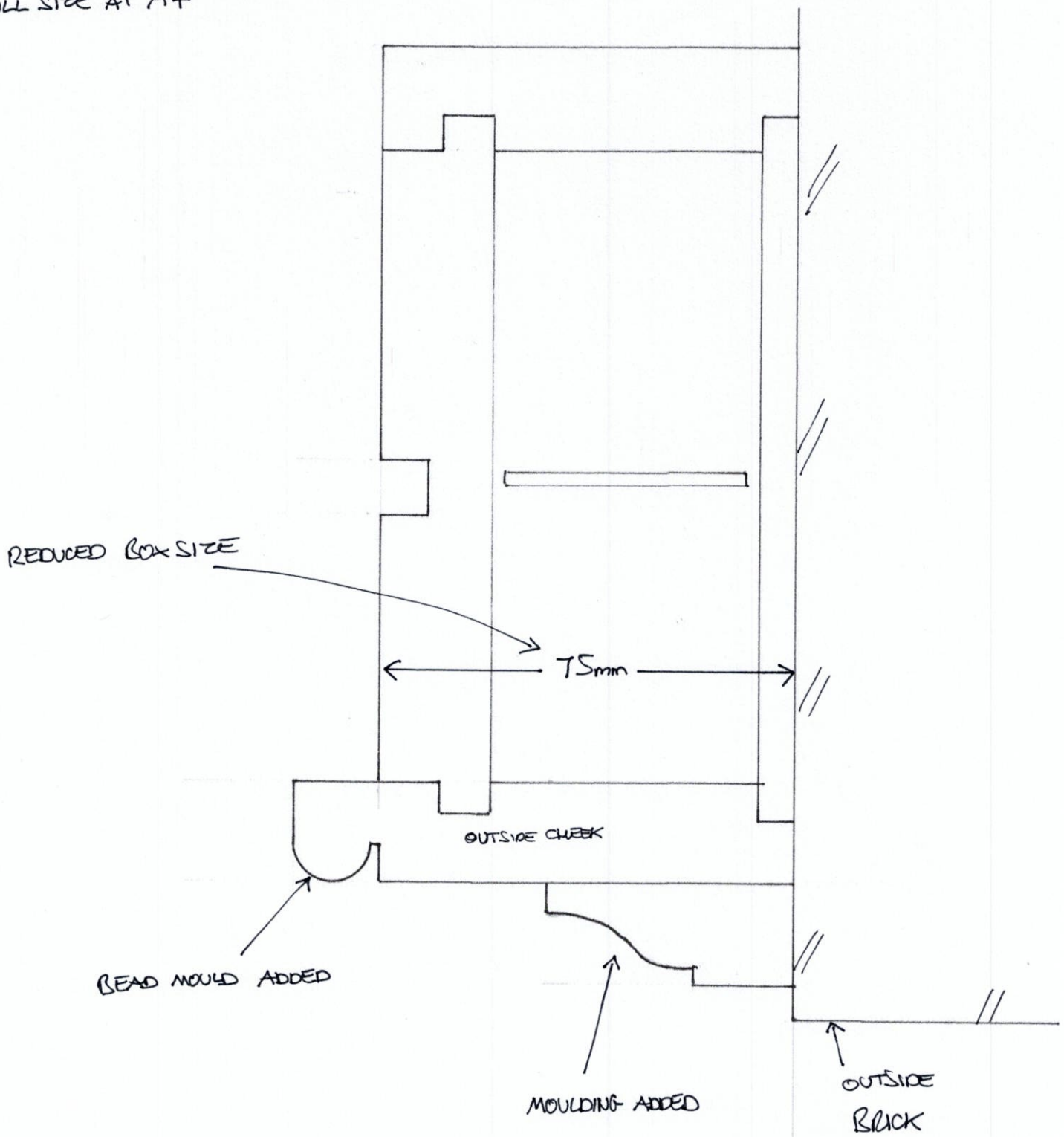

One Step Joinery
Unit 15, Techno Trading Estate
Bramble Road, Swindon, SN2 8HB
Tel: 01793 524458
Fax: 01793 574806
e-mail: info@onestepjoinery.co.uk

1:1 @ A4

mm
0 10 20 30 40 50

REF: 19 LONDON ROAD
SN8 1BA

DRG N° 06

SASH DETAILS

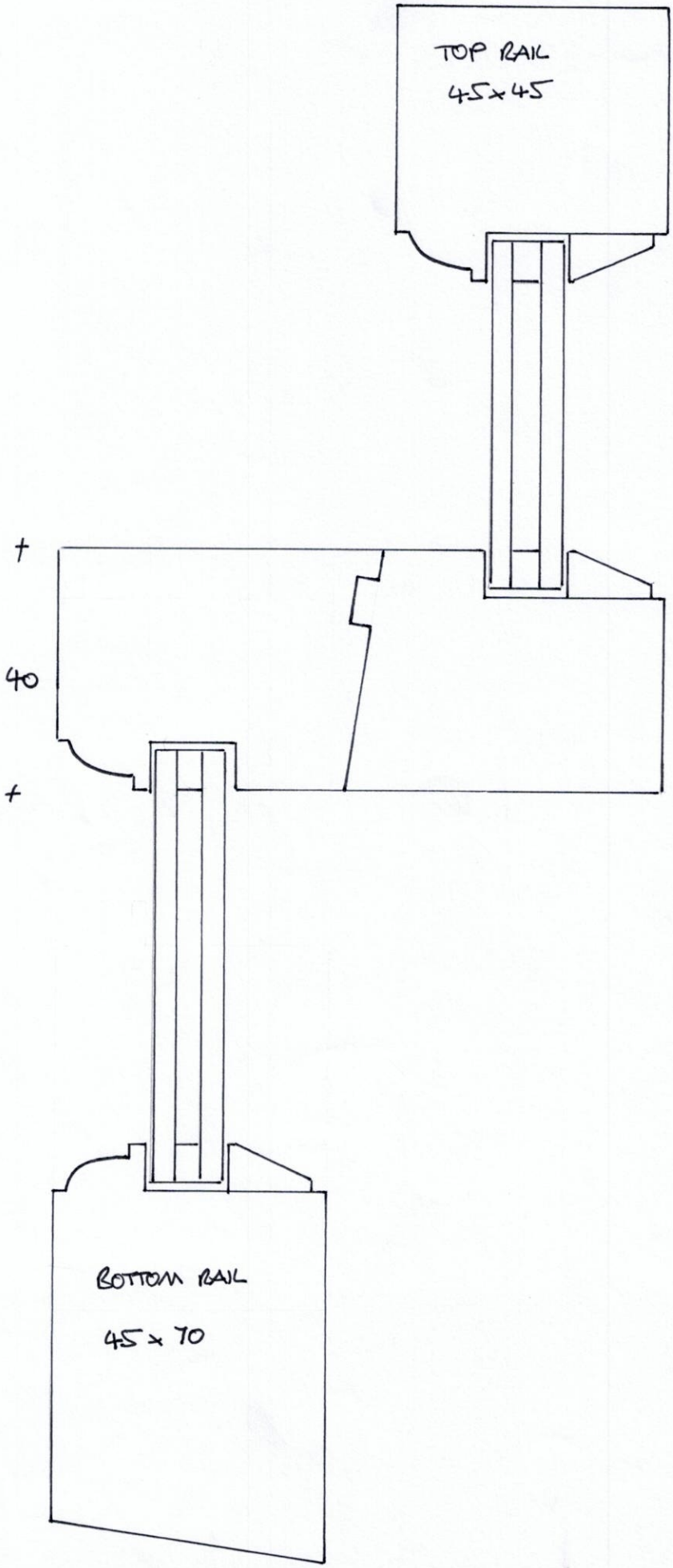

One Step Joinery
Unit 15, Techno Trading Estate
Bramble Road, Swindon, SN2 8HB
Tel: 01793 524458
Fax: 01793 574806
e-mail: info@onestepjoinery.co.uk

1:1 @ A4

0 10 20 30 40 50 mm

REF: 19 LONDON ROAD
SN8 1BA

DRG Nº 07

GLAZING BAR DETAILS

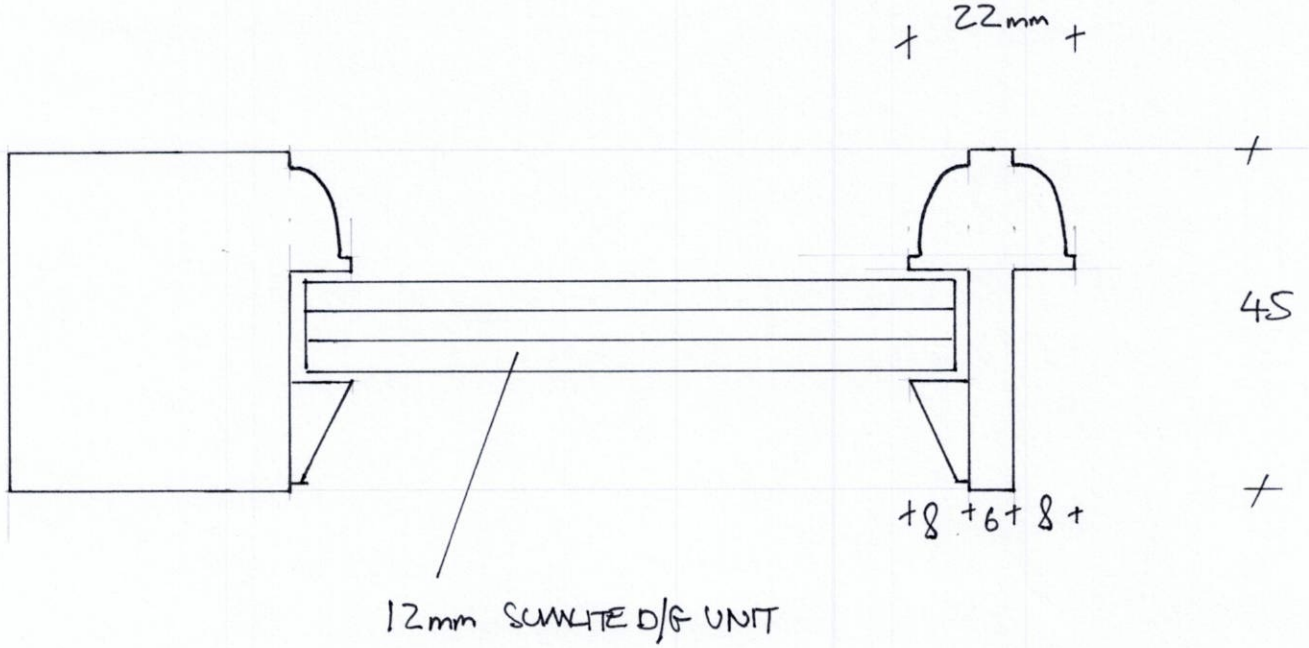



PHOTO N° 01



PHOTO N° 02



PHOTO N° 03



PHOTO N° 04



PHOTO N° 05