© Whittam Cox Architects - Disclaimer:

This drawing is copyright of WCEC Group Ltd trading as Whittam Cox Architects, and shall not be reproduced nor used for any other purpose without the written permission of the Architects. This drawing must be read in conjunction with all other related drawings and documentation. It is the contractors responsibility to ensure full compliance with the Building Regulations. Do not scale from this drawing, use figured dimensions only. It is the contractors responsibility to check and verify all dimensions on site. Any discrepancies to be reported immediately. IF IN DOUBT ASK.
Materials not in conformity with relevant British or European Standards/Codes of practice or materials known to be deleterious to health & safety must not be used or specified on this project.

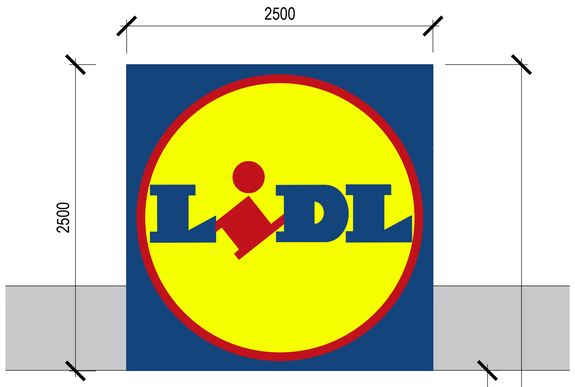

BUILDING CANOPY

5mm acrylic facing (opaque) back-sprayed showing corporate logo set in coated aluminium box frame internally illuminated, fixed to canopy.

Blue	RAL 5010
Red	RAL 3020
Yellow	RAL 1021

Luminance -
20 Fluorescent Tubes
10 x 1500mm / 58W
10 x 1200mm / 36W

Luminance (Canada / m2 = cd/m2) of illuminated sign for the different colours.
Blue Surface - 12-15 cd/m2
Blue/Typeface - 12-15 cd/m2
Yellow Surface - 550 cd/m2
Red Surface - 85 cd/m2

S1 Canopy mounted illuminated 'LiDL' logo sign



FLAGPOLE SIGN
Internally illuminated Flexface sign and banner.

Blue	RAL 5010
Red	RAL 3020
Yellow	RAL 1021
Light grey	RAL 9006
Dark grey	RAL 7024

Lidl Logo as lighting box with a thermoformed, curved and extensive printed logo shell.
Frame construction out of glavanized steel.

Illumination with SAPs-LED:
Power consumption: 485 W, power input: 2,25 A,cos phi > 0,93
Luminance yellow undimmed: approx. 580 cd/m²
Luminance yellow dimmed: from approx. 80 cd/m² to 460 cd/m²

S2 Totem flag pole

Illuminated poster display unit with stainless steel frame

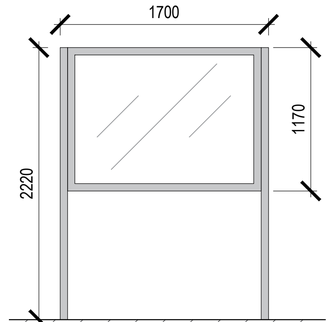

S3 Poster display unit

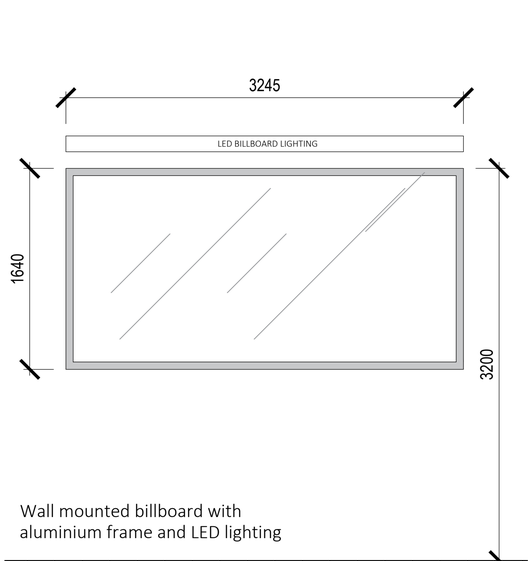

Wall mounted billboard with aluminium frame and LED lighting

S4 Wall mounted billboard

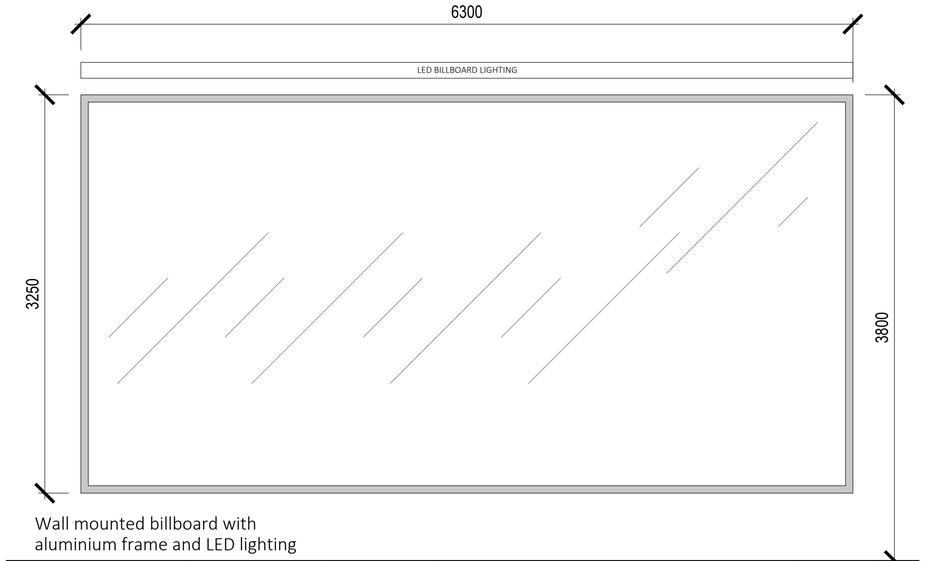

Wall mounted billboard with aluminium frame and LED lighting

S5 Wall mounted billboard

No.	Date	Description	Drawn/Chkd By

CLIENT
Lidl Great Britain Limited

PROJECT
Wootton Bassett
B4042

TITLE
Proposed Signage Details

DRAWING STATUS
Planning

DRAWN	CHECKED
CA	WF

SCALE 1:25 @ A1 / 1:50 @ A3
DATE November 2023

Whittam Cox ARCHITECTS
Chesterfield / 01246 260261
London / 020 3388 0019
Leeds / 0113 468 2450
whittamcox.com

JOB NO.	DRAWING NO.	REV
230257	PL-02	-