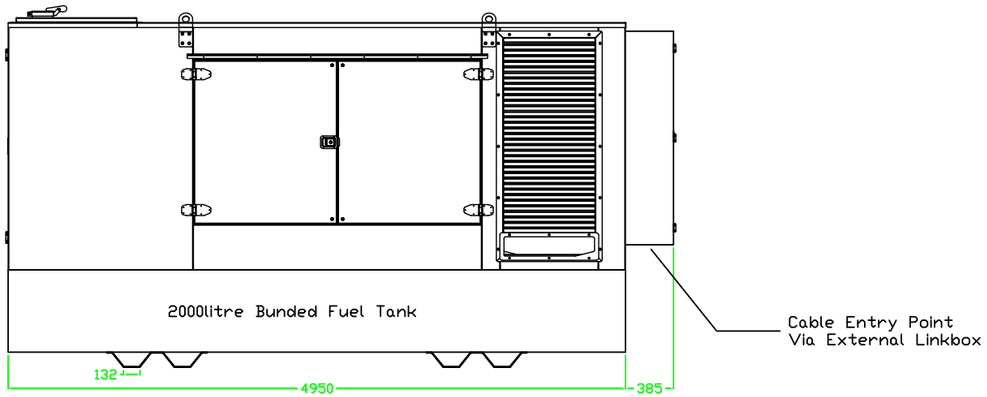

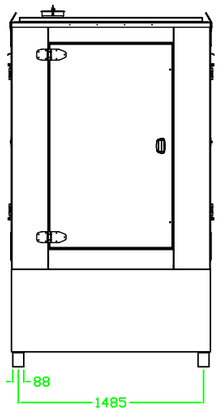

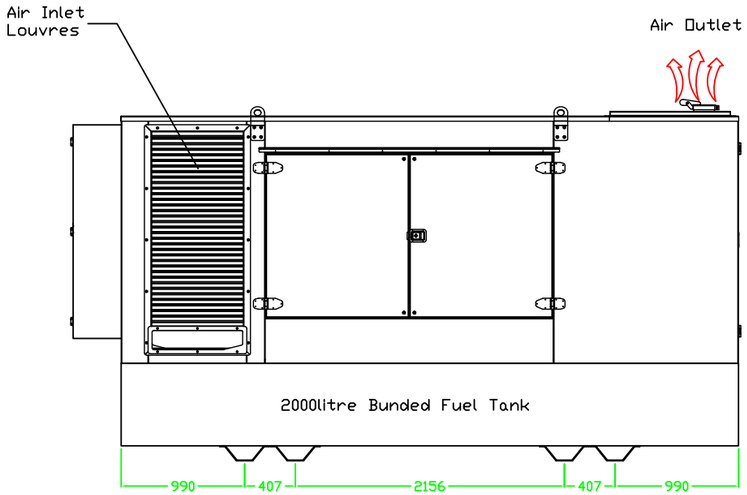

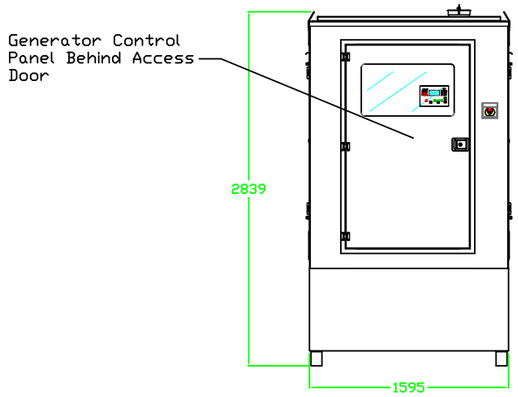

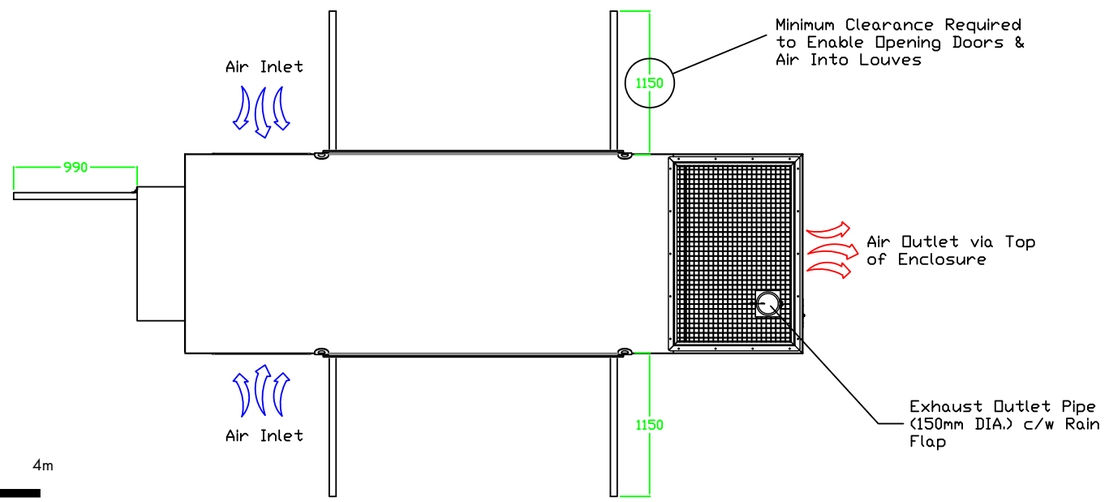

0 1m 2m 3m 4m

55450-M-GA-01 | ISSUE B

Notes

Rev	Date	
H		
G		
F		
E		
D		
C		
B	05.01.24	SCALE CORRECTED & SCALE BAR ADDED
A	23.11.23	PRELIMINARY DRAWING

THE COPYRIGHT IN THIS DRAWING IS OWNED BY TGC INTERNATIONAL Ltd. AND IT MAY NOT BE PUBLISHED OR REPRODUCED IN ANY MATERIAL FORM WITHOUT THE WRITTEN CONSENT OF THE COMPANY

Project: Park House, Marlborough
Generator Installation Works

Client: Lowe & Oliver

Title: Enclosed Generator Layout Drawing

Scale	Drawn	Date
1:50 @ A3	L.D	23.11.23
	Checked L.D.	
	Verified L.W	

Stage	Drawing Number	Rev.
	55450-M-GA-01	B

THE GENERATOR COMPANY
Units 12&13 Stirling Park
Laker Road
Rochester
Kent, ME1 3QR
Tel (01634) 668 090 Fax: (01634) 687 038
sales@tgc.uk.com www.tgc.uk.com