(B) Outdoor Unit: U-250PZH2E8

Unit: mm

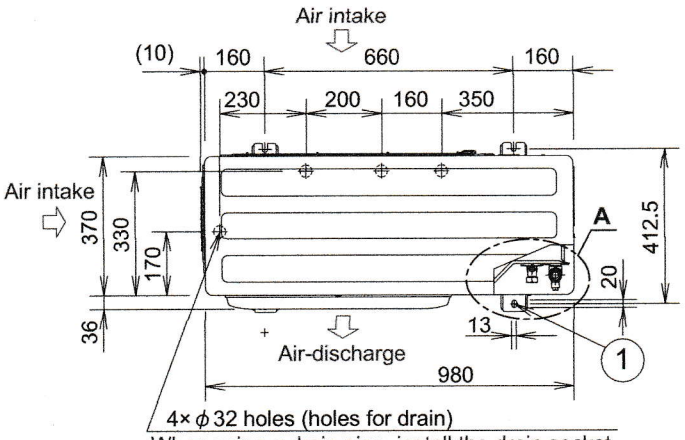

①	Mounting hole (4-R6.5), anchor bolt : M10
②	Refrigerant tubing (liquid tube), flared connection (ø12.7)
③	Refrigerant tubing (gas tube), flared connection (ø19.05)*1
④	Refrigerant tubing port
⑤	Electrical wiring port (ø13)
⑥	Electrical wiring port (ø22)
⑦	Electrical wiring port (ø27)
⑧	Electrical wiring port (ø35)

Specification for pipe connecting indoor unit to outdoor unit.

		U-250PZH2E8
Valve size (Outdoor unit)	Liquid	ø12.7
	Gas	ø19.05 *1
Main tube (Outdoor unit to Indoor unit)	Liquid	ø12.7
	Gas	ø25.4

*1 (Gas tubing connection) While the main gas tube is ø25.4, since connecting the outdoor unit's 3-way valve requires a ø19.05 flare, please be sure to use standard accessories joint tubing A for connection (brazing).

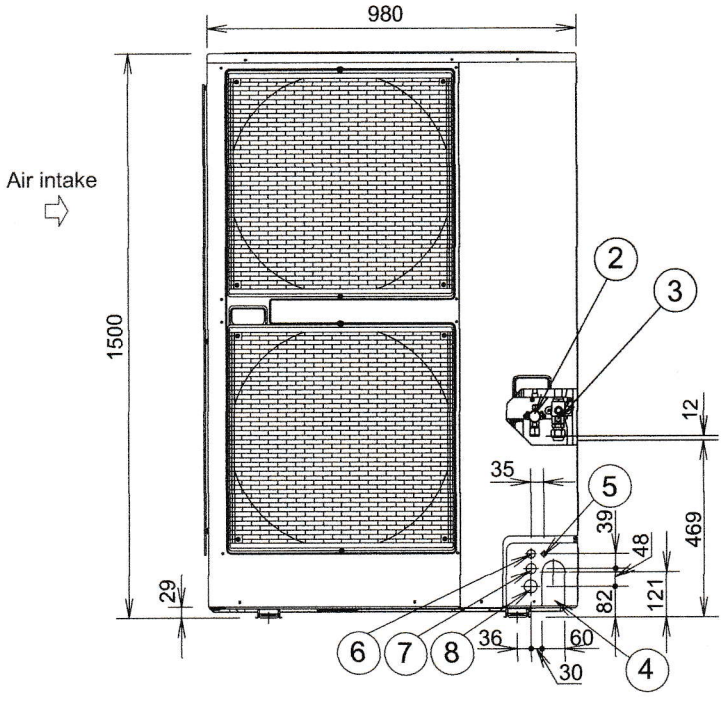

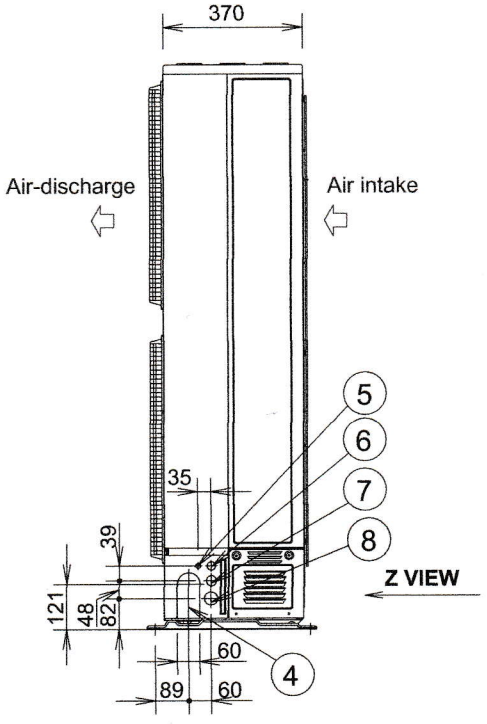

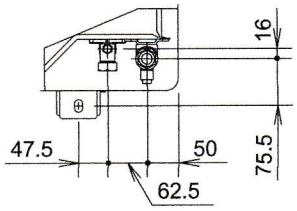

A VIEW

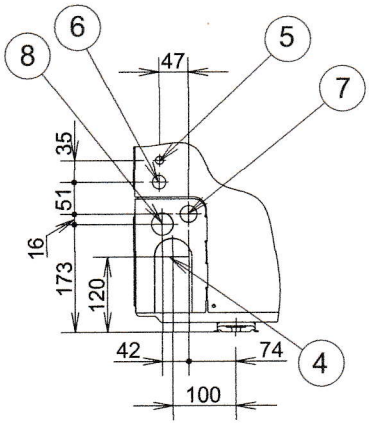

Z VIEW

Single-Type

1-1. Unit Specifications

PZH2

High Static Pressure Ducted Type S-250PE3E5B / U-250PZH2E8

INDOOR			MODEL	S-250PE3E5B			-			-	
PANEL			MODEL	-			-			-	
OUTDOOR			MODEL	-			U-250PZH2E8			-	
Branch pipe			MODEL	-							
Performance test condition				ISO13253 / EN14511 / EN12102 / EN14825							
Power supply			Ø, Hz	1Ø 50Hz			3Ø 50Hz				
			V	220V	230V	240V	380V	400V	415V	Min	Max
COOLING	Capacity		kW	23.2	23.2	23.2	-	-	-	6.1	27.0
			BTU/h	79200	79200	79200	-	-	-	20800	92100
	Current		A	4.30	4.20	4.10	10.8	10.3	9.90	-	-
	Input power		W	830	830	830	6.630k	6.630k	6.630k	-	-
			TOTAL W	-			7.460k	7.460k	7.460k	1.330k	9.200k
	Annual consumption		TOTAL kWh *4	-	-	-	-	3730	-	-	-
	EER/EER CLASS		TOTAL (W/W) *5 / ("A"~"G")	-	-	-	3.11	3.11 /B	3.11	4.59	2.93
	Erp *6	Pdesign	kW	-	-	-	-	23.2	-	-	-
		$\eta_{s,c}$	(W/W)	-	-	-	-	190.6	-	-	-
		Annual consumption	kWh	-	-	-	-	-	-	-	-
		Class		-	-	-	-	-	-	-	-
	Power factor		%	-	-	-	93	93	93	-	-
	Noise indoor		dB-A (H/M/L)	47/45/42			-			-	-
			Power Level dB	79/77/74			-			-	-
	Noise outdoor		dB-A (H/L)	-			59/-			-	-
			Power Level dB	-			78/-			-	-
HEATING	Capacity		kW	28.0	28.0	28.0	-	-	-	5.5	29.0
			BTU/h	95500	95500	95500	-	-	-	18800	98900
	Current		A	4.30	4.20	4.10	12.0	11.4	11.0	-	-
	Input power		W	830	830	830	7.380k	7.380k	7.380k	-	-
			TOTAL W	-			8.210k	8.210k	8.210k	1.100k	9.500k
	COP/COP CLASS		TOTAL (W/W) *5 / ("A"~"G")	-	-	-	3.41	3.41 /B	3.41	5.00	3.05
	Erp *6	Pdesign at -10°C	kW	-	-	-	-	20.0	-	-	-
		Tbivalent	°C	-	-	-	-	-10	-	-	-
		$\eta_{s,h}$	(W/W)	-	-	-	-	142.7	-	-	-
		Annual consumption	kWh	-	-	-	-	-	-	-	-
		elbu(-10°C)	kW	-	-	-	-	0.00	-	-	-
		Class		-	-	-	-	-	-	-	-
	Power factor		%	-	-	-	93	93	93	-	-
	Noise indoor		dB-A (H/M/L)	47/45/42			-			-	-
			Power Level dB	79/77/74			-			-	-
	Noise outdoor		dB-A (H/L)	-			63/-			-	-
			Power Level dB	-			82/-			-	-
EXTRA LOW TEMP	Total capacity(kW)/Input power(W)/COP			-						-	
Max Current(A) / Max Input power(W)				6.60/1440	6.40/1440	6.30/1440	18.5/11.3k	18.5/11.9k	18.5/12.4k	-	
Starting current(A) (Cooling/Heating)				-	-	-	10.8/12.0	10.3/11.4	9.90/11.0	-	
Comp output(W)				-			5.50k	5.50k	5.50k	-	
Time Delay fuse max size(A)				15			30			-	
Network Impedance(ΩMAX.)				-			-			-	
Fan motor output (Indoor/Outdoor) W				750 × 2			120 × 2			-	
Moisture removal volume			L/h(Pt/h)	6.8 (6.8 ×1) (14.3)			-			-	
External static pressure			Pa	75 / (130/200)			-			-	
Indoor Air flow	Cooling		m^3/min (m^3/h) (H/M/L)	84.0/72.0/59.0 (5040)/(4320)/(3450)			-			-	-
	Heating		m^3/min (m^3/h) (H/M/L)	84.0/72.0/59.0 (5040)/(4320)/(3450)			-			-	-
Outdoor Air flow	Cooling		m^3/min (m^3/h)	-			160.0 (9600)			-	-
	Heating		m^3/min (m^3/h)	-			160.0 (9600)			-	-
Refrigerant type / amount g(oz)				-			R32 5.20k (183.4)			-	
Product dimension			Height mm(inch)	486	(19-1/8)		1500	(59-1/16)		-	
			Width mm(inch)	1456	(57-5/16)		980	(38-37/64)		-	
			Depth mm(inch)	916	(36-1/16)		370	(14-9/16)		-	
Product dimension (Panel)			H×W×D mm, inch	-	-		-			-	
Packing dimension			Height mm(inch)	610	(24-1/32)		1642	(64-41/64)		-	
			Width mm(inch)	1646	(60-13/16)		1095	(43-7/64)		-	
			Depth mm(inch)	1132	(44-9/16)		529	(20-53/64)		-	
Weight			(NET) kg(lb)	88	(195)		128	(282)		-	
			(GROSS) kg(lb)	108	(239)		140	(309)		-	
			Panel (NET) kg(lb)	-	-		-			-	
Layers limit (actually)				4 (5)			1 (2)			-	
Operation condition			Cool (DBT)	18°C ~ 32°C			-15°C ~ 46°C			-	
			Heat (DBT)	16°C ~ 30°C			-20°C ~ 24°C			-	
Max Working Pressure HP/LP Mpa (bar)				4.15/2.70 (41.5/27.0)						-	
PIPING	Pipe diameter mm (inch)			(Liquid)Ø12.7(1/2) (Gas)Ø25.4(1)			(Liquid)Ø12.7(1/2) (Gas)Ø25.4(1)			-	
	Connecting method			(Liquid)flared type (Gas)brazing connection			(Liquid)flared type (Gas)brazing connection			-	
	Standard length m(ft)			7.5 (24.6)						-	
	Pipe length range m (ft)			5 ~ 60 m (16.4 ~ 196.9)						-	
	Indoor unit & Outdoor unit height difference m (ft)			30 m(OD located lower) / 30 m(OD located higher) (98.4 / 98.4)						-	
	Add gas amount g/m (oz/ft)			80 g/m (0.860)						-	
	Pipe length for additional gas m (ft)			30m (98.4)						-	

*1 In case it is necessary to indicate the air flow volume in (l/s), the value in (m^3/min.) shall be multiplied by 16.7 and rounded down the decimal point.
*2 If the EUROVENT Certified models can be operated under the "extra-low" temperature condition, -7°C dry bulb and -8°C wet-bulb temperatures with rated voltage 230V shall be used.
*3 Network Impedance shall be applicable for EUROPE and CHINA models.
*4 The annual consumption is calculated by multiplying the input power at 230V(400V) by an average of 500 hours per year in cooling mode.
*5 EER and COP classification is at 230V(400V) only in accordance with EU directive 2002/31/EC.
*6 $\eta_{s,c}$ and $\eta_{s,h}$ classification is at 230V(400V) only in accordance with EN-14825. For heating, $\eta_{s,h}$ indicates the value of only Average heating season.