St. Peter's School, Marlborough

Supplementary Information Document no 2

Drainage

This document sets out the drainage details as designed by the project drainage consultants (Cole Easdon) in conjunction with WCC and the Environment Agency. The drawings show the drainage arrangements for the 2021 approved scheme which included some office use. The change to a fully residential scheme will result in some minor connection location amendments but is proposed that these are dealt with at a site level.

Scheme design is shown in the following appendices:

Appendix 1: engineering layout

Appendix 2: drainage construction details

Appendix 3 external works layout

the Architecture Practice

January 2024

APPENDIX 1


Presumed existing drain route into public foul sewer
Existing foul water chamber to be removed
Proposed Cellular Attenuation Tank (21.5x5.0x0.4m); AquaCell manufacturer or equivalent 125.50 Base Level
Hydrobrake limiting flow to 79l/s
MAIN BUILDING
FFL 127.07 (Existing)
FFL 126.67 (Existing)
FFL 126.81 Existing
FFL 127.060
FFL 126.960
Stn:S1 E=419086.183 N=169128.266 Ht=126.41
Stn:S2 E=419086.183 N=169135.776 Ht=126.493
Stn:S3 E=419064.634 N=169138.703 Ht=126.807
Stn:S4 E=419046.939 N=169138.058 Ht=126.973
Stn:S5 E=419083.305 N=169105.262 Ht=126.746
Stn:S6 E=419063.632 N=169095.622 Ht=126.659
Stn:S7 E=419027.432 N=169113.063 Ht=126.443
Stn:S8 E=419047.199 N=169111.849 Ht=126.851
Stn:S9 E=419047.199 N=169111.849 Ht=126.403
Stn:S10 E=419073.270 N=169125.894 Ht=126.858
Ridge:137.64
Ridge:138.91
Ridge:137.67
Ridge:138.90
Ridge:137.27
Ridge:133.99
Ridge:135.60
Ridge:134.75
Ridge:134.15
Ridge:136.13
Eave:135.10
Eave:135.15
Eave:136.27
Eave:135.13
Eave:131.28
Eave:132.32
Roof:131.57
Roof:131.07
Roof:134.01
Roof:131.35
Roof:131.36
Roof:131.28
Roof:129.20
Roof:131.26
Roof:131.25
Roof:129.27
Tarmac
Grass
Shrubs
Concrete Slabs
Timber Shelter
Timber Cabin
Plinth
Parapet
Brick Wall TOW:129.38
Brick Wall TOW:127.09
Brick Wall TOW:127.26
Iron Railing Fence on Brick Wall TOW:128.41
Iron Railing Fence on Brick Wall TOW:129.38
Close Boarded Fence Ht: 1.8m
Chain Link Fence
Hedge Approx Ht:2.0m
Pier Matting
Paving
Bollard
Beacon
Kerb
Dropped Kerb
Planter
Plaque
Sign
Dia:0.35m
Dia:0.9m
Dia:1.0m
Dia:0.3m
Dia:0.5m
Dia:0.45m
Dia:0.25m
Dia:0.20m
Dia:0.6m
Dia:0.7m
Dia:0.8m
Dia:0.1m
Eave:130.00
Eave:129.98
Eave:132.32
Ridge:134.14
Ridge:136.13
Ridge:131.75
Ridge:131.12
Ridge:131.27
Ridge:131.25
Ridge:131.26
Ridge:129.27
Ridge:129.57
Ridge:131.36
Ridge:134.75
Ridge:134.15
Ridge:135.60
Ridge:136.13
Ridge:136.14

APPENDIX 2

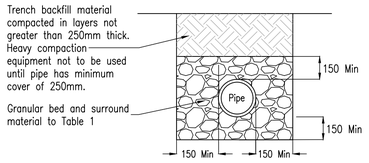

GRANULAR PIPE BEDDING AND SURROUND

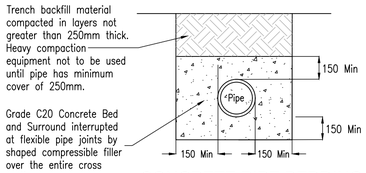

CONCRETE PIPE BEDDING AND SURROUND WHERE COVER <1.2m IN TRAFFICKED AREAS

Bedding and Sidefill Material

Bedding, sidefill and surround materials shall comply with Water Industry Specification No. 4-08-02. Bedding and sidefill material to be selected imported granular material complying with Table 1.

Trench Backfill Material

Where pipe trenches lie beneath road, footway and parking areas trench backfill material shall be type 1 up to formation level. Trench backfill material, whether selected from locally excavated material or imported, shall consist of uniform, readily compactable material, free from vegetable matter, and frozen material, or materials susceptible to spontaneous combustion, and excluding clay of liquid limit greater than 80 and/or plastic limit greater than 55 and materials of excessively high moisture content. Clay lumps and stones shall be retained on 75mm and 37.5mm sieves

TABLE 1: PROCESSED AND AS-DUG GRANULAR BEDDING AND SIDEFILL MATERIALS FOR RIGID SEWERS

Pipe nominal size (DN)	Nominal maximum particle size (mm) See note (c)	Class of bedding See note (d)	Suitable Materials	
			ETHER: Maximum CF value for acceptability See note (b)	OR: Materials specified in British Standards See note (a)
100	10	S	0.15	10mm nominal single-size
		B	0.30	
		F	0.15	
		N	0.30	Fine aggregate
Over 100 to 150	16	S	0.15	10mm or 14mm nominal single-size or 14mm to 5mm graded
		B	0.30	
		F	0.15	
		N	0.30	Fine aggregate
Over 150 to 300	20	S	0.15	10, 14 or 20mm nominal single-size or 14mm to 5mm graded or 20 to 5mm graded
		B	0.30	
		F	0.15	
		N	0.30	All-in aggregate or fine aggregate
Over 300 to 550	20	S	0.15	14mm or 20mm nominal single-size or 14mm to 5mm graded or 20 to 5mm graded
		B	0.30	
		F	0.15	
		N	0.30	All-in aggregate or fine aggregate
Over 550	40	S	0.15	14, 20 or 40mm nominal single-size crushed rock or 14mm to 5mm, 20 to 5mm or 40 to 5mm graded
		B	0.30	
		F	0.15	
		N	0.30	All-in aggregate or fine aggregate

Notes:

(a) Processed granular materials to include aggregates to BS EN 13242.

(b) Compaction Fraction value (CF), see Appendix B of Wis IGN No. 4-08-02.

(c) The nominal maximum particle sizes apply both to processed and as-dug materials (see Section 4 of IGN No. 4-08-01-Issue 4 and No.4-08-01 Amendment [Nov 2008]).

(d) Bedding classes are defined in:- BS EN 1295-1:1997 Structural Design of Buried Pipelines under various conditions of loading. TRRL - Simplified Table of External Loads on Buried Pipelines.

(e) The sulphate content of bedding and sidefill materials for use with cementitious pipe should not be greater than 0.3% as sulphur trioxide.

PIPE BEDDING AND BACKFILL DETAILS

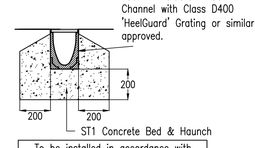

To be installed in accordance with manufacturers guidelines and specifications

ACO DRAIN DETAIL TYPE M100D

SITED IN TRAFFICKED AREAS

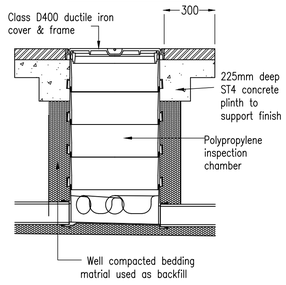

SITED IN SOFT LANDSCAPED AREAS

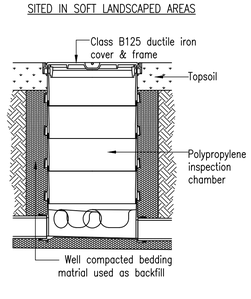

POLYPROPYLENE INSPECTION CHAMBER INSTALLATION

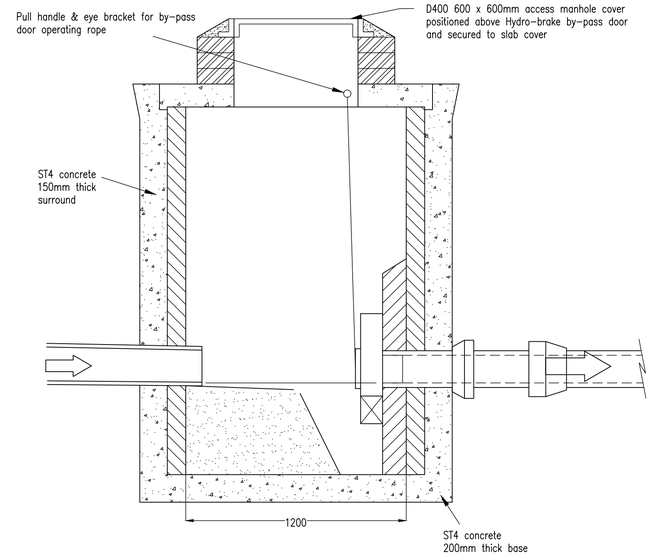

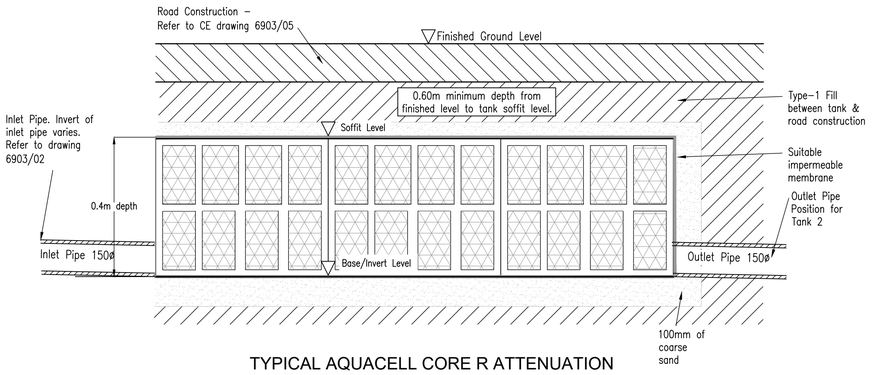

TYPICAL AQUACELL CORE R ATTENUATION STORAGE TANK

To be installed in accordance with manufacturers guidelines and specifications

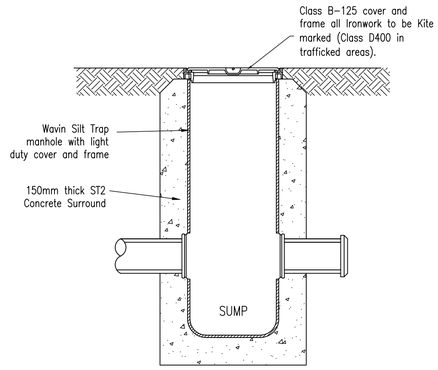

CATCHPIT

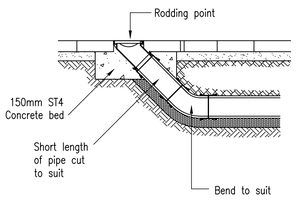

RODDING POINT

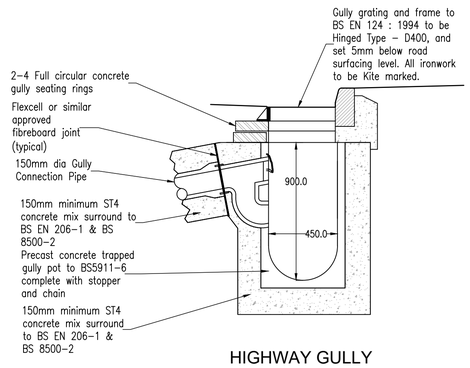

HIGHWAY GULLY

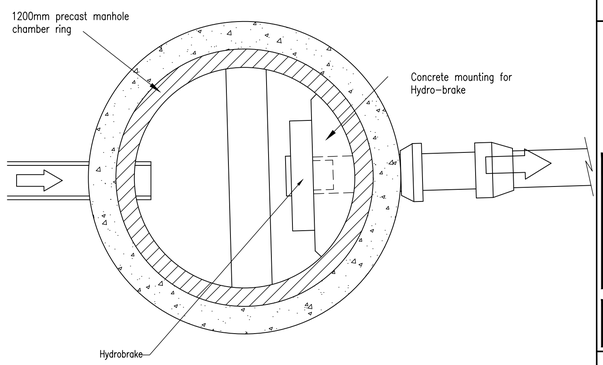

To be installed in accordance with manufacturers guidelines and specifications

TYPICAL HYDROBRAKE FLOW CONTROL MANHOLE

MANHOLE NOTES

1. Access Cover Grades BSEN 124 : 1994

Class D400 - Carriageway and parking areas.

2. Access cover for Type B manholes to have a minimum clear opening of 600mm square.
   2.1. Access covers located on bends or within junctions to be treated with non-slip coating, such as 'GripTop' by Saint Gobain, or similar approved

3. Pipes built into manholes shall have a flexible joint as close as feasible to the external face of the structure and the length of the first pipe and rocker pipe shall be as shown.

Nominal diameter(mm).	Rocker Pipe length(m).
150 - 600	0.60
675 - 750	1.00
825 & Over	1.25

4. All pipes entering the bottom of the manhole to have the same soffit level unless otherwise shown on plan

5. The channel shall be preformed half round channel.

6. Where a future connection is shown in the manhole schedule the pipe shall be supplied with a stopper and subjected to to an air test.

7. All work to be carried out in connection with sewers and manholes to be in accordance with the Health and Safety guideline No. 2 'Safe Working in Sewers and Sewage Works'

8. Drainage pipelines shall be constructed using Class M concrete or extra strength clayware pipes with Type B bed (imported granular bedding material to be used).

No.	By	Date	Revision Details
B	BK	16.03.22	Aquacell tank detail revised
A	FW	17.12.21	Concrete culvert tank details removed Cellular tank details added

© Copyright

COLE EASDON CONSULTANTS
160 AZTEC
AZTEC WEST
ALMONDSBURY
BRISTOL
BS32 4TU
T: 01454 800474
E: cec@ColeEasdon.com
www.ColeEasdon.com

Client
Sherbourne Developments Group Limited

Job Title
Former St Peter's School Site
Marlborough
Wiltshire
SN8 1LQ

Drawing Title
Private Drainage Construction Details

Drawing Status:

FOR COMMENT	FOR PLANNING	FOR TENDER	FOR APPROVAL	FOR CONSTRUCTION	AS BUILT
X					

CONSTRUCTION AT CLIENT / CONTRACTOR RISK

Designed by:	Drawn by:	Checked by:
ZB	ZB	AD

Date	Scale
August 2021	NTS @ A1

Drg. No.	Rev.
6903/06	B

APPENDIX 3



REFERENCE DRAWINGS:				
Drawing No.	Drawing Title	Revision	Date	Company
1428/WD/101	Proposed Site Plan	T1	Jan 2022	The Architecture Practice
18109(1)	Topographical Survey	–	05.12.18	Geosight

Surface Finishes and Kerbing Key:

- Proposed BN Dropped Kerb (50mm upstand)
- Proposed BN Dropped Kerb (0 to 6mm upstand)
- Proposed EF Edging Kerb (flush)
- Proposed CS2 Channel Kerb (flush)
- Full Depth Carriageway Construction
- Permeable Full Depth Carriageway Construction No Dig Construction. In line with TPO drawing / Report No. ARB-1226-01
- Permeable Block Paved Paving No Dig Construction – In line with TPO drawing / Report No. ARB-1226-01
- Block Paved Paving
- Soft Landscaping

Note: Proposed road levels to TAP drawing ref 1428/WD/104

No.	By	Date	Revision Details
A	FW	28.03.22	Driveway hatching and kerbs updated to suit site layout

© Copyright

COLE EASDON CONSULTANTS
UNIT 2 YORK HOUSE
EDISON PARK
DORCAN WAY
SWINDON
WILTSHIRE
SN3 3RB
T: 01793 619965
E: cec@ColeEasdon.com
www.ColeEasdon.com

Client
Sherbourne Developments Group Limited

Job Title
Former St Peter's School Site
Marlborough
Wiltshire
SN8 1LQ

Drawing Title
External Works Layout

Drawing Status:

FOR COMMENT	FOR PLANNING	FOR TENDER	FOR APPROVAL	FOR CONSTRUCTION	AS BUILT
		X			

CONSTRUCTION AT CLIENT / CONTRACTOR RISK

Designed by:	Drawn by:	Checked by:
AD	BK	FW

Date	Scale
March 2022	1:200 @ A1

Drg. No.	Rev.
6903/04	A