A2 PRINT

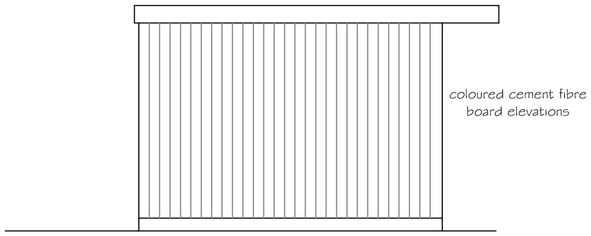

PROPOSED SIDE (EAST) ELEVATION 1:100

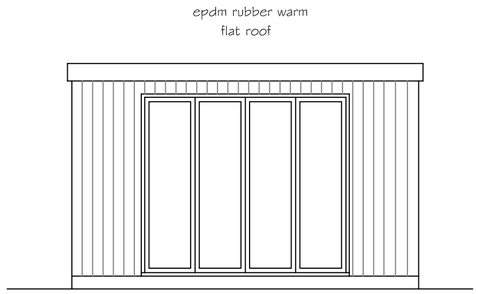

PROPOSED FRONT (NORTH) ELEVATION 1:100

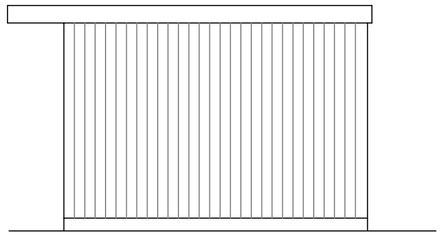

PROPOSED SIDE (WEST) ELEVATION 1:100

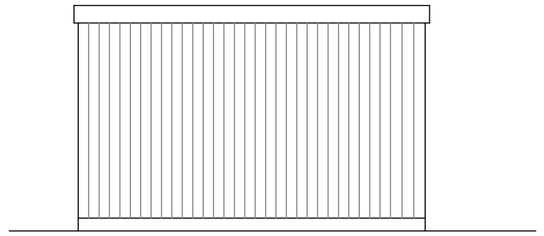

PROPOSED REAR (SOUTH) ELEVATION 1:100

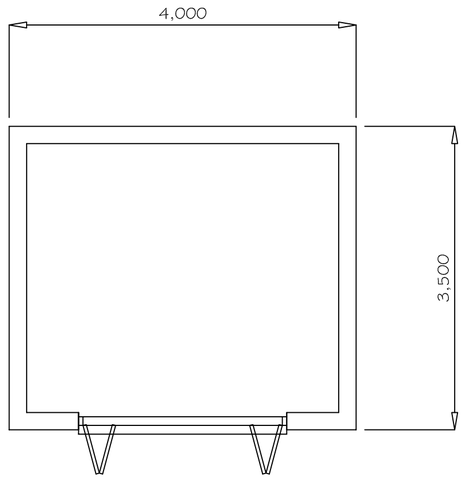

PROPOSED GROUND FLOOR PLAN 1:50

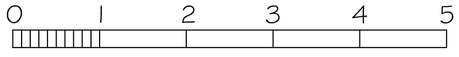

scale bar 1:50

SJF PLANNING
& DESIGN SERVICE
01225 782078 simonnearthebell@gmail.com

PROPOSED	REAR KITCHEN EXTENSION, DORMER ROOF EXTENSION & GARDEN ROOM
CLIENT	MR & MRS S COLLINS
LOCATION	148 THE STREET BROUGHTON GIFFORD SN12 8PR
TITLE	GARDEN ROOM

DRG NO	ISSUE	DATE
2340-3	1	SEPT 2023

A2 PRINT