EDS
Electrical Development Services Limited



Courtfield House, Polebarn Road Trowbridge, BA14 7EG. Lighting Strategy

September 2023

Project No: 627 Doc Ref: 627/201 Rev: -

Client: Ashford Home (South Western) Limited

Courtfield House, Polebarn Road, Trowbridge, BA14 7EG

Lighting Strategy

	Name	Date
Prepared by	Jakob Sparrow	11/09/2023

Issue Register

Prepared by	Rev	Date	Description/Comments
		-/-/-	-

Contents

Introduction	1
Environmental Considerations	3
Lighting Proposals	5
Summary	7

Appendices

Appendix A	Proposed Site Legal Plan
Appendix B	Proposed Lighting Drawing
Appendix C	Manufacturer's literature

1. Introduction

1.1 Background

Ashford Homes is proposing to build a nine new residential development at Courtfield House, Polebarn Road, Trowbridge, BA14 7EG. A general layout of the site masterplan is included in Appendix A.

EDS was subsequently appointed to assess the potential impact of artificial light and develop a lighting strategy to support the planning application.

1.2 Objective

This report forms the lighting strategy and describes the exterior lighting proposals and how environmental impact is minimised.

The key objectives of the lighting strategy are to:

- Discharge Planning Condition 15:

15. No external lighting fixture or fitting shall be installed to any dwelling hereby approved or within the respective and associated domestic curtilages or communal open space unless and until detailed specifications of the lighting, the illuminance levels, mapped lighting direction and any shrouding to limit light exposure beyond the targeted direction, have been submitted to and approved by the Local Planning Authority in writing. The submitted details shall be required to demonstrate how the proposed lighting would impact on bat habitat compared to the existing pre-development lighting circumstances.

In addressing these objectives there is also a need to provide a sustainable solution that minimises energy usage and carbon emissions.

1.3 Scope

The study will consider the potential impact of artificial light at the sensitive locations advised by the project team.

The strategy will include a proposed lighting layout supported with a luminaire specification, positions and lux contours suitable for planning.

2. Environmental Considerations

In order to minimise obtrusive light and its impact on the local ecology within and beyond the development special considerations are necessary, the key objectives being to:

- Keep the number and wattage of light sources to a minimum;
- Keep the height of light sources to a minimum;
- Avoid direct upward light above the horizontal to maintain a 'dark sky';
- Maintain 'dark corridors' and minimise light trespass at environmentally sensitive locations, e.g. bat roosts and flight lines; and
- Follow the principles described in the Institution of Lighting Professionals Guidance Notes for the Reduction of Obtrusive light (GN01:2011).

3. Lighting Proposals

The proposed lighting design is outlined on drawing in Appendix B. The drawing shows indicative luminaire locations positions, details of a suitable luminaire and projected lux contours. It should be noted that the lux values representing horizontal illuminance exclude the screening effect of rear shields, buildings, trees etc. The 0.5 lux contour is of particular significance as the generally accepted threshold for illuminance in the vicinity of bat habitats.

The preferred luminaire specified a directional LED light source. Manufacturer's literature is included in Appendix C.

Figure 1 - Proposed
Ansell Reef Bi-Directional (Upward & downward Lighting)



Where special consideration is required to reduce the back spill of light due to bat activity, download lighting only has been specified as shown below.

White light sources such as LED have the benefit of excellent colour rendering properties with the ability to improve the night-time environment for users. LEDs also emit virtually no ultra violet light given that other light sources with a high UV content, particularly at the blue end of the spectrum can be detrimental to ecology and have a negative impact on bats and invertebrates.

LED luminaires are predominantly available in 'neutral' white with colour temperatures of 4000˚K. With reference to the chromaticity diagram below it can be seen that the proposed 'warm' white 3000˚K LEDs are nearer the yellow/orange end of the colour spectrum.

Figure 3 - Chromaticity Diagram with Black Body Locus

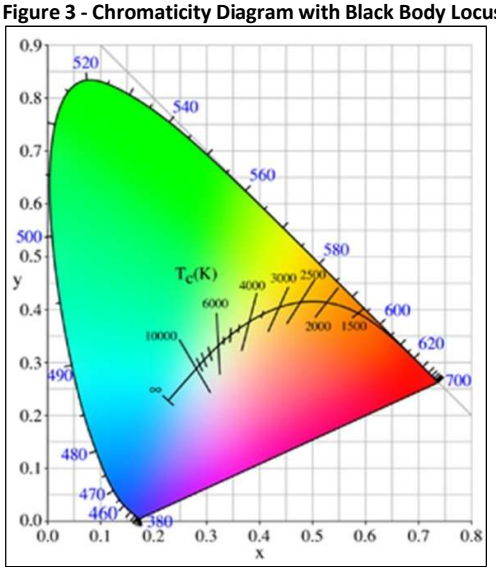

4. Summary

The proposed exterior lighting scheme for the development is optimised to minimise light spill and the potential effects of artificial light on local ecology. An LED light source is specified with no UV content and a warm colour temperature with a lower blue light content that is more sympathetic to bats.

Due to the sensitivity of bats to artificial light sources, illuminance levels close to natural moonlight ≤0.5 lux are normally preferred. The projected horizontal illuminance contours indicate that the impact on the environment and local ecology will be low. The key features are:

- An environmentally sensitive lighting scheme with low lighting levels and a directional LED light source to reduce lightspill and maintain dark corridors throughout the site.

- The proposals follow the principles and guidance set out in Institute of Lighting Engineers in their publications "Guidance Notes for the Reduction of Obtrusive Light (ILE, 2005)" and Guidance Note 08/18 Bats and Artificial Lighting in the UK

In summary, the sympathetic lighting design and control measures will ensure that any adverse impacts in all sensitive receptors are minimal, including ecological receptors (primarily bats), the night sky and viewpoints in the surrounding area.

Appendix A
Proposed Site Legal Plan

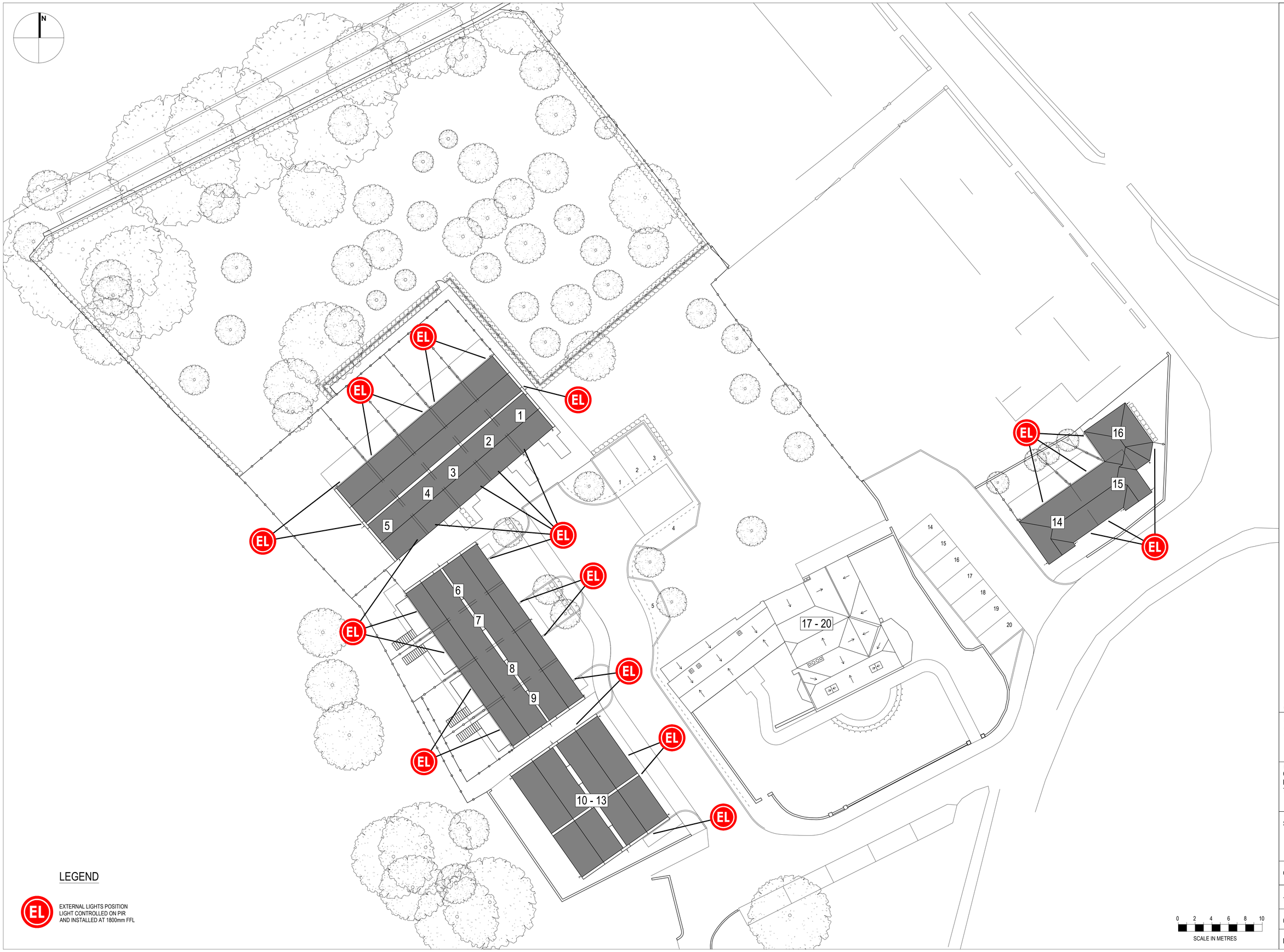

LEGEND

EL — EXTERNAL LIGHTS POSITION
LIGHT CONTROLLED ON PIR
AND INSTALLED AT 1800mm FFL

0 2 4 6 8 10
SCALE IN METRES

ASHFORD HOMES
[SOUTH WESTERN] LIMITED

DORIC HOUSE MIDDLETON DRIVE
BRADFORD ON AVON
WILTSHIRE BA15 1GB

TEL: 01225 791155
FAX: 01225 791166

WEB SITE: www.ashford-homes.co.uk
E-MAIL: ahmail@ashford-homes.co.uk

A 05-07-23 first issue
revisions

Only figured dimensions are to be worked from. Discrepancies must be reported to Ashford Homes.

THIS DRAWING IS COPYRIGHT ©

project
COURTFIELD HOUSE
POLEBARN ROAD
TROWBRIDGE

drawing name
SITE EXTERNAL LIGHTING

drawing no.	revision
CFH-160	A
scale: 1:200	paper size: A1
date: 05-07-2023	
drawn by: PM	approved by:

Appendix B

Proposed Lighting Drawing

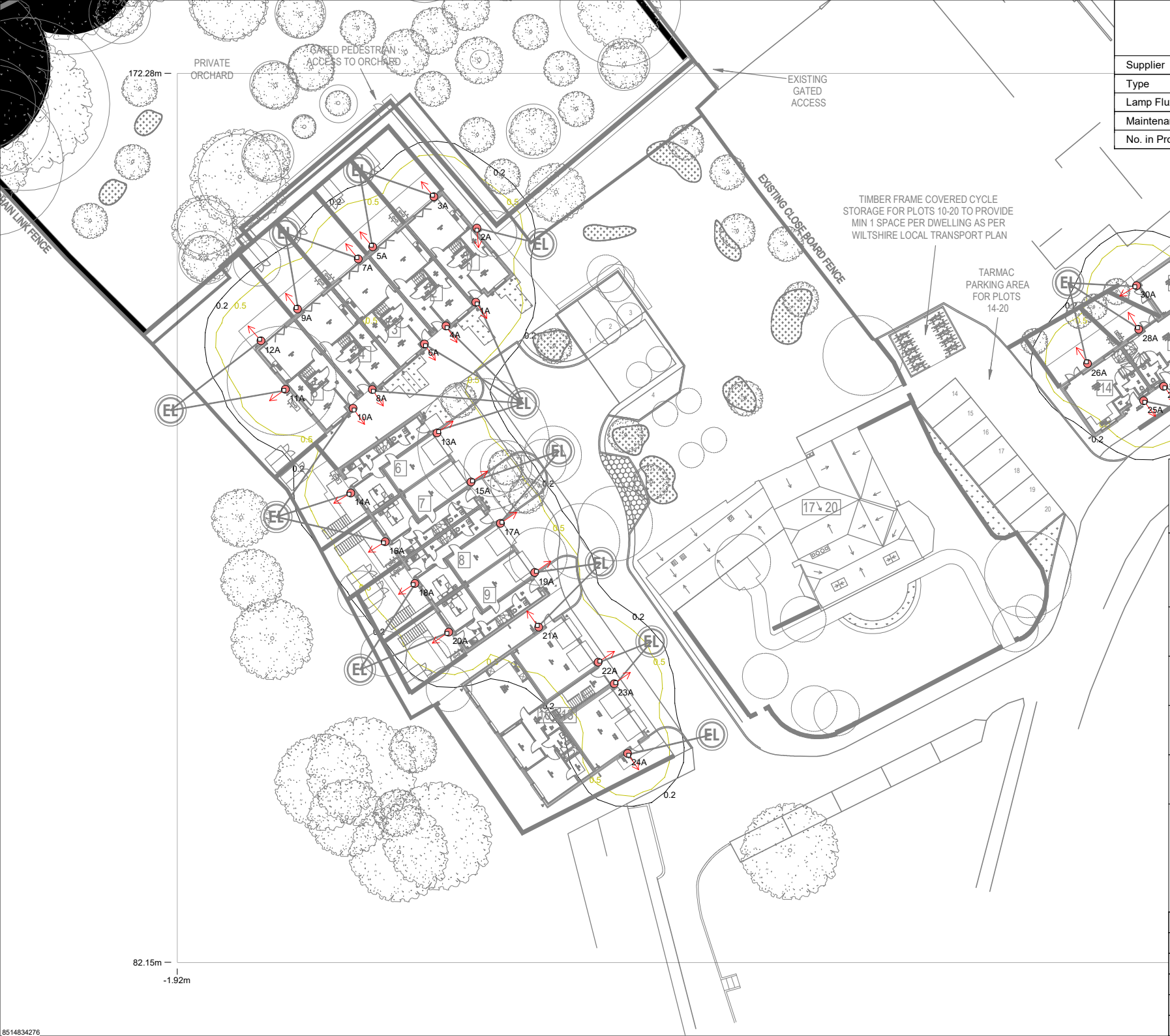

	Luminaire A
Supplier	
Type	[TEST]
Lamp Flux (klm)	0.76
Maintenance Factor	0.75
No. in Project	30

LIGHTING REALITY

PROJECT NAME:
Courtfield House, Towbridge

PROJECT No:
627

SCALE:
1:500

DATE:
11 September 2023

CALCULATION:
Horizontal Illuminance (lux)

DESIGNER:
EDS

Lanterns specified Type A - Ansell Reef Bi-Directional.

All luminaire fittings are to be mounted at 1800mm above ground level.

In order to meet the guidelines set out by the ILE 'Guidance for Reduction of Obtrusive Light' a warm white LED colour temperature has been specified (3000K). Areas adjacent to the ecology zones, downward directional lighting units have been specified, therefore produces no upward skyglow.

Results Grid 1	
Eav	0.84
Emin	0.00
Emax	40.24
Emin/Emax	0.00
Emin/Eav	0.00

8514834276

Appendix C

Manufacturer’s Literature

Reef CCT Bi-directional Wall Light Black



- Durable outdoor bidirectional wall light suitable for residential and hospitality applications
- Polycarbonate construction ideal for coastal applications
- Choice of matt white or black finishes
- CCT selectable between 3000K, 4000K and 6000K
- Unique lockable installation base plate with push fit loop-in loop-out terminals for ease of installation
- Discrete PIR option available
- Non-dimmable

General Information

Lamp Type	LED
IP Rating	IP65
IK Rating	IK08
Class Protection	2
Internal / External	Internal / External
Surface / Recessed / Suspended	Surface
Warranty (Years)	3
Material	Polycarbonate

Technical Information

Wattage	10W
Lumens Delivered	890lm (4000K)
Lm/W	89lm/W (4000K)
Beam Angle	90
CRI	80
CCT	3000/4000/6000K
Input	220/240V
Hertz	50/60Hz
Operating Temp	-20°C to 40°C
Lumen Depreciation	L80 54,000h
Power Factor	0.9

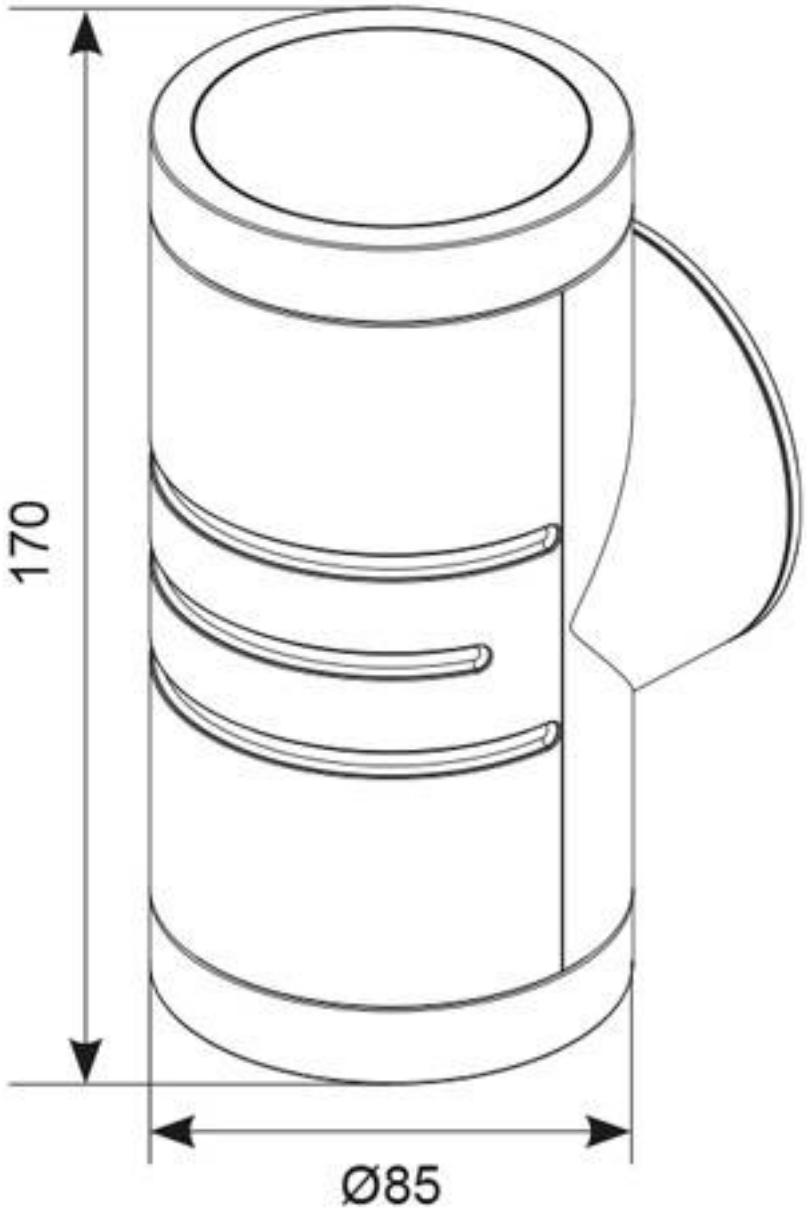
170
Ø85