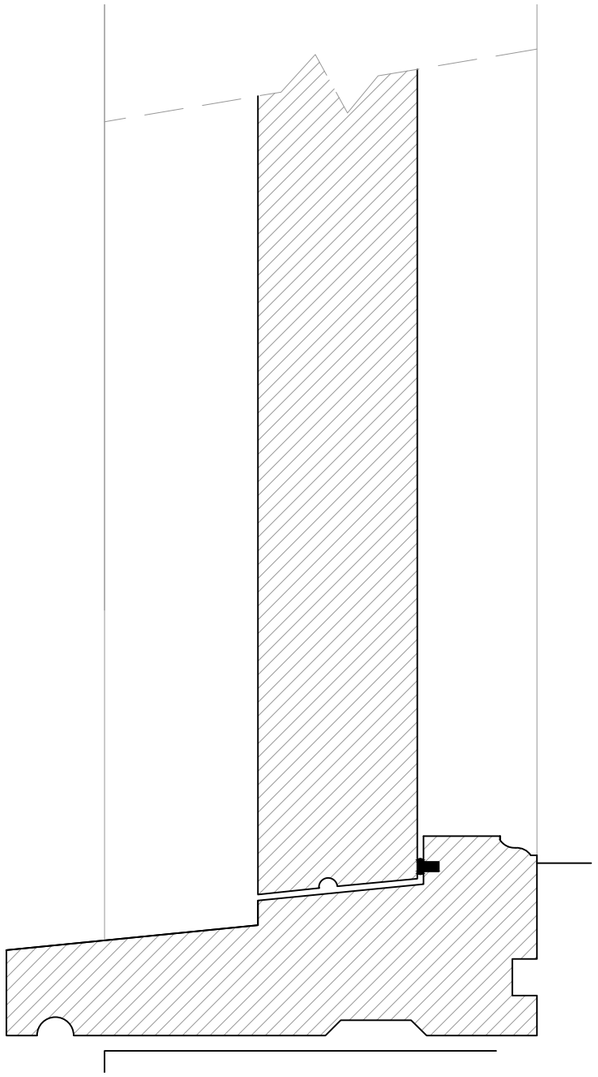

Proposed Door Section - Cill
Scale 1:2

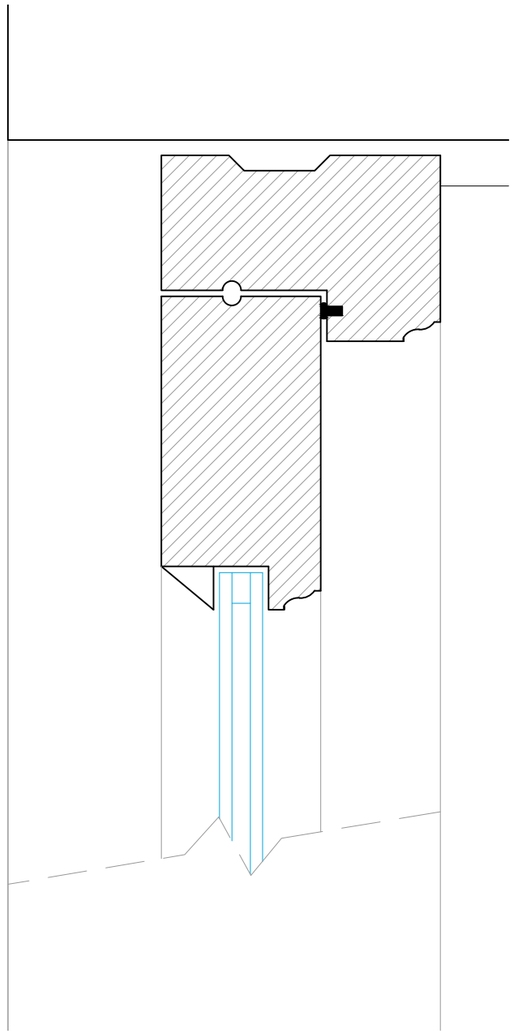

Proposed Door Section - Head
Scale 1:2

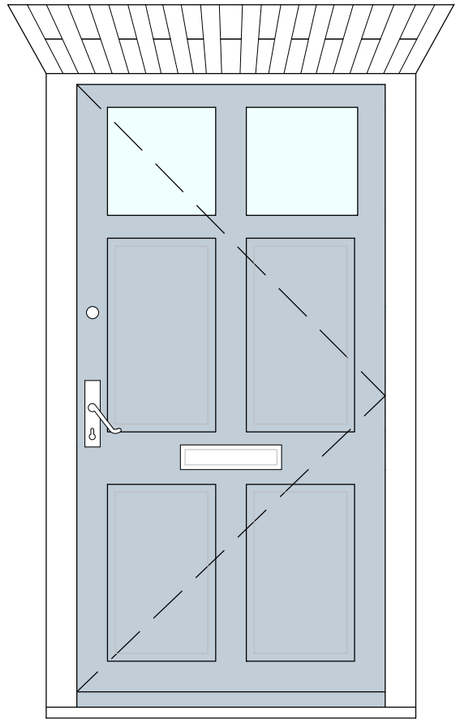

Proposed Door Front Elevation
Scale 1:20

1:2 [mm]
0 50 100

1:10 [mm]
0 100 200 300 400 500

Drawing for planning purposes only.
Not to be used for construction.

Tuttle architectural services

Ground Floor
6 Pelhams Court
Marlborough
Wiltshire SN8 2AG

T. 01672 518 278
E. info@tuttlearchserv.co.uk
facebook.com/tuttlearchserv
W. tuttlearchserv.co.uk

Job Title
Proposed amendments to ground floor window & door on front elevation & internal hallway/staircase alterations @ 11 Church Street, Great Bedwyn, SN8 3PE

For Mr & Mrs Connor

Drawing Title
Proposed Door Elevation & details

DRAWING NUMBER	REV
11 Church Street - 04	

REVISIONS

SCALE	DATE	DRAWN BY	PAPER SIZE	JOB No.
As Indicated	Dec 23	MCW	A3	1518