PROPOSED ELEVATION AND DETAILS FOR GFW-4 AND GFW-7

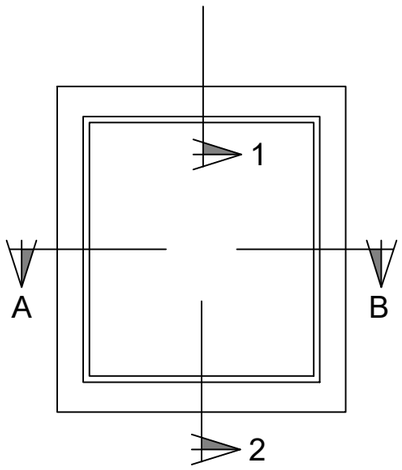

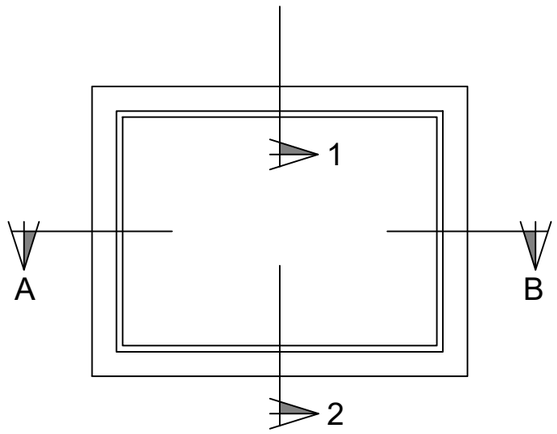

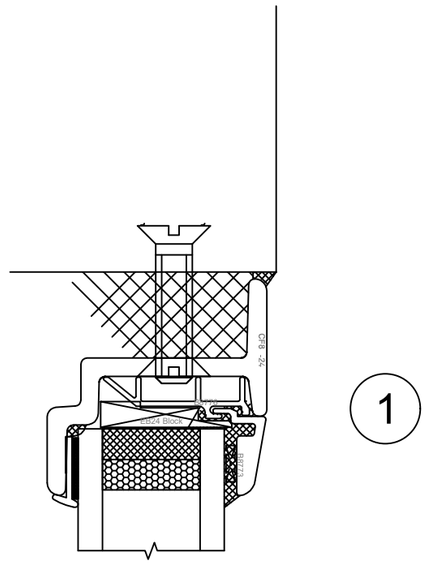

1

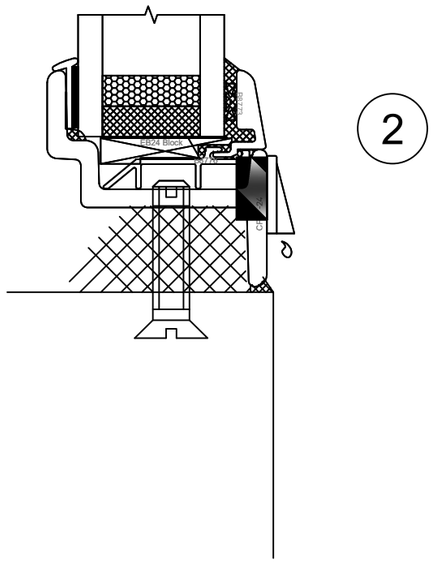

2

A

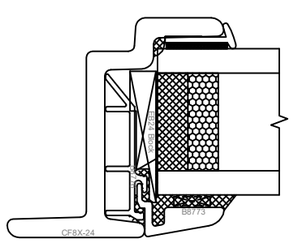

B

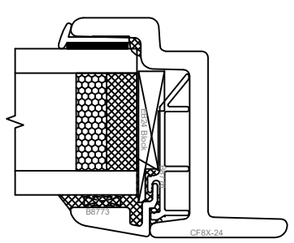

1:10



1:1



211 / 19492-211 PROPOSED WINDOW DETAILS
SCALE 1:10 & 1:1

REV	AMENDMENT	DATE
A	GFW-4 amended, multipanes ditched.	15. 12. 2023

THE CROFT, GRAFTON ROAD,
WILTON, SN8 3SS

PROPOSED CRITTAL WINDOW DETAILS

Scale: 1:10 & 1:1 @ A3	Drawn by: AS	Date: AUG '23
	Drawing Number: 19492-211-RevA	Revision: A

HBAS Historic Building Advisory Service