

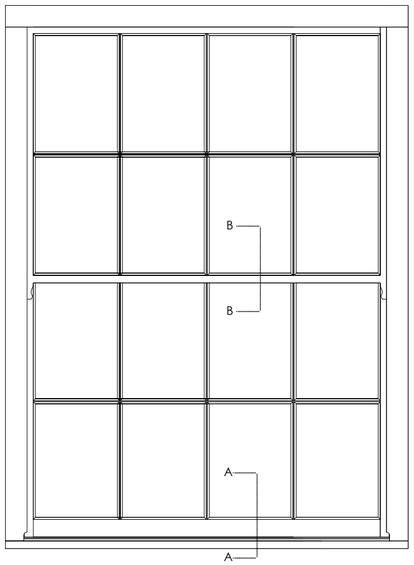

WINDOW TYPE A 1:20

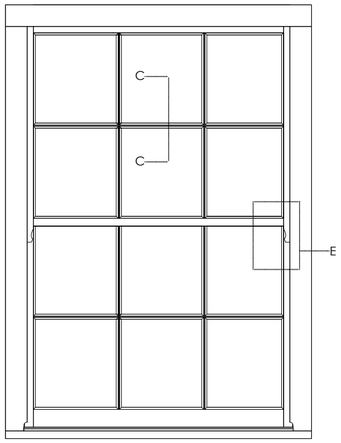

WINDOW TYPE B 1:20

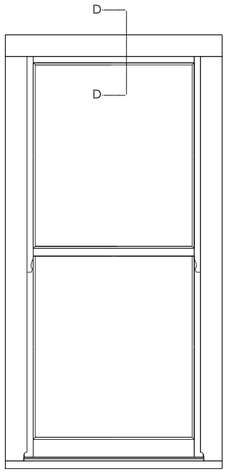

WINDOW TYPE C 1:20

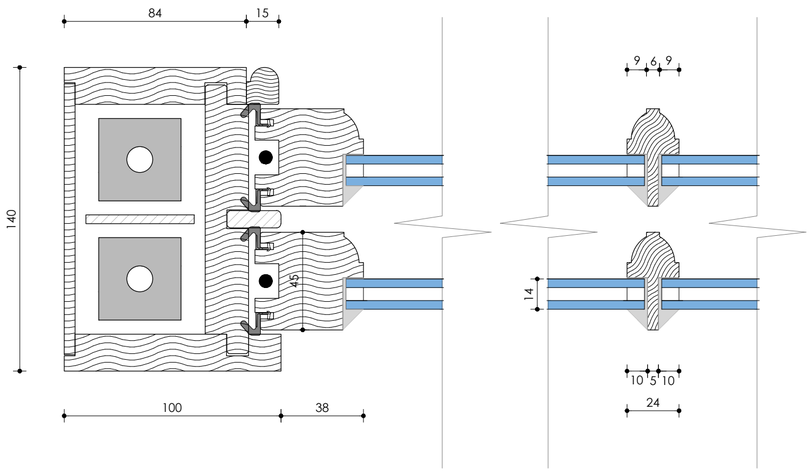

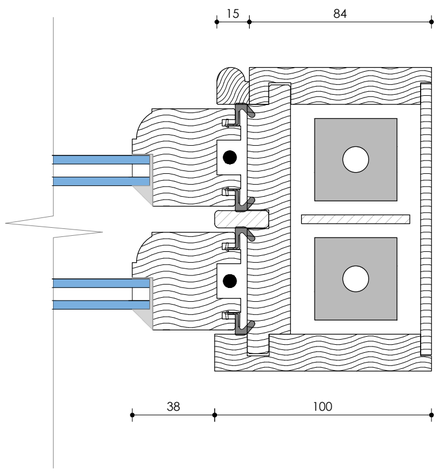

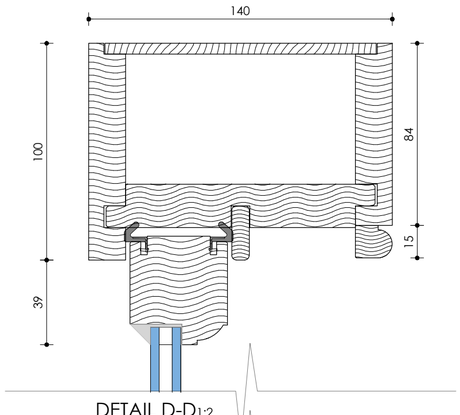

DETAIL D-D1:2

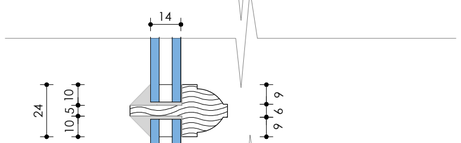

DETAIL C-C1:2

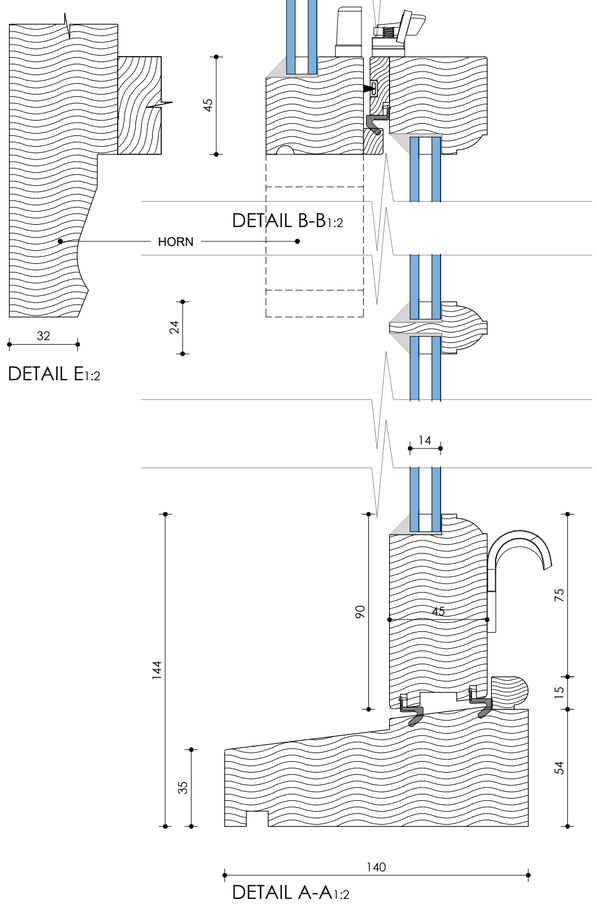

DETAIL B-B1:2

DETAIL E1:2

DETAIL A-A1:2

This drawing is copyright of CLARK & MASLIN Ltd and may not be copied or reproduced without permission.

Figured dimensions are to be taken in preference to scaled dimensions.

Large scale drawings to have preference to small scale drawings.

Dimensions for fixed-in items are to be checked on site prior to manufacture.

REV	DETAIL OF REVISION	BY	DATE

SPECIFICATION

Material	Manufactured in selected engineered hardwood, sourced from sustainable and managed forestry (FSC or PFEC certified)
Mechanism	Sashes are hung on chains, operating over pulleys and counter balanced with lead weights
Weatherseal	The window is fully weather sealed to BS EN 6375-1 2009
Glazing	Windows are glazed using Slim sealed units and traditionally sealed externally using a white glazing compound.
Glass	Slim dual sealed units complying with BS EN 1279 typically achieving a whole window Acoustic value up to 36dB noise reduction
Thermal Performance	Thermal performance is calculated by the standards of EN ISO 10077-1:2006 and typically this window achieves a U-value of 1.6 W/m²K or better
Glazing Bars	Solid traditional framed glazing bars with individual glass units
Cills	Manufactured in Hardwood
Horns	Solid feature horns to top sashes to match existing
Fittings	A lockable Fitch fastener and two finger pulls to the bottom sash with colour & finish by client.
Ventilation	A controllable trickle ventilator to be fitted
Restrictors	Restrictors TBC
Factory Finishing	3 coats of sprayed applied microporous water based paint system

SCHEDULE

WINDOW TYPE A	WF10
WINDOW TYPE B	WF.11, WF.12
WINDOW TYPE C	WG.01, WG.02, WG.03, WG.04, WG.05, WF.06, WF.07, WF.08, WF.09, WS.13, WS.14, WS.15, WS.16, WS.17

CLARK & MASLIN
Unit 5, Charlton Business Park
Crudwell Road, Malmesbury
Wiltshire, SN16 9RU
Telephone: 01666 822911
www.clarkandmaslin.co.uk
Planning Architecture Conservation

Client
MR & MRS POOLMAN

Project
PROPOSED ALTERATIONS AT:
AVON HOUSE, ABBEY ROW, MALMESBURY.
SN16 0AG

Description
PROPOSED WINDOW DETAILS.

Scale	PG Size	Drawn	Date
1:2 1:20	A2	TB	DEC '23

Drawing No	Revision
5594/52	-