

SJ Stephens Associates

ARBORICULTURAL, LANDSCAPE & MANAGEMENT CONSULTANTS

Savernake Barn
Stokke Common
Great Bedwyn
Marlborough
Wiltshire SN8 3LL
Tel: 01672 871 862
www.sjstephens.co.uk
e: info@sjstephens.co.uk

Planning Ref: PL/2023/05139

Arboricultural Impact Assessment

- Tree Survey
- Tree Protection Plan
- Arboricultural Method Statement

For:-

Demolition of existing garage and erection of 2no. new dwellings with associated access, parking, landscaping and private amenity space

At:-

Forest View
East Grafton
Marlborough
SN8 3DB

On behalf of:-

Mrs S Clemence
Forest View
East Grafton
Marlborough
SN8 3DB

Prepared by:

Catherine Fforde, HND Hort,
Dip Arb L4(ABC), MCIHort, MArborA
Email: catherine@sjstephens.co.uk

Approved by:

Simon Stephens MA Oxon, Dip Arb(RFS), MArborA, C Env. MICFor
Email: simon@sjstephens.co.uk

Survey Date: 11th December 2023
Report Date: 15th December 2023
Project no: 2204

CONTENTS

1 BACKGROUND
2 SURVEY DETAILS AND SCOPE
3 SURVEY LIMITATIONS
4 LEGAL PROTECTION OF TREES
5 ARBORICULTURAL METHOD STATEMENT
6 ARBORICULTURAL IMPACT ASSESSMENT
7 REFERENCES

Appendices
A Tree Protection Plan: drawing no: 2204-01
B Tree Schedule
C BS 5837:2012 - Trees in relation to design, demolition and construction, Table 1
D Tree Protection Fencing Detail
E Site photos
F Proposed Site Plan

1 BACKGROUND

1.1 This Arboricultural Impact Assessment has been instructed by Fowler Architecture and Planning on behalf of Mrs Clemence to specify tree protection measures and to assess the arboricultural impact of the proposed demolition of existing garage and erection of 2no. dwellings with associated access, parking, landscaping and private amenity space.

1.2 Trees were surveyed, with findings shown in the Tree Schedule in Appendix B and plotted on the Tree Protection Plan in Appendix A. This also shows tree protection measures, which are specified in the Arboricultural Method Statement in section 5 below. The arboricultural impact is assessed in section 6, which assumes that these measures are followed.

1.3 The tree survey was undertaken, and this report has been prepared, by Catherine Fforde HND Hort, Dip Arb L4(ABC), MCIHort, MArborA and approved by Simon Stephens MA Oxon, Dip Arb (RFS), MArborA, C Env, MICFor a Registered Consultant with the Arboricultural Association, with over 20 years relevant experience.

1.4 This survey and report have been prepared in accordance with the recommendations of BS 5837:2012, Trees in relation to design, demolition and construction - Recommendations.

1.5 Documentation supplied:

- Topographical Survey
- Hearne Arboriculture, Report of the Arboricultural Constraints to Potential Development at Forest View, dated 22 April 2023
- Fowler Architecture and Planning, Proposed Site Plan: drawing no: 200402-03 Rev A

2 SURVEY DETAILS AND SCOPE

2.1 The site survey included trees and shrubs, within and immediately adjacent to the red line boundary, with a stem diameter over 75mm at 1.5m height, as shown located on the Tree Protection Plan, included as Appendix A.

2.2 Tree inspection took place from ground level with the use of binoculars, sounding hammer and metal probe using the Visual Tree Assessment method (Mattheck & Breloer 1994). The presence and condition of bark and stem wounds, cavities, decay, fungal fruiting bodies and any structural defects that could increase the risk of structural failure were noted.

2.3 Tree diameters were measured using a girthing tape and tree heights were measured using a hypsometer. Where use of a tape was restricted by site factors, diameters were estimated, with the diameter recorded in the tree schedule preceded by the word “est”.

2.4 At the time of the survey, the weather was fine with no restrictions to visibility. Broadleaf trees were not in leaf. In places, dense undergrowth restricted access and dense ivy restricted visibility of tree stems.

2.5 Tree details are shown on the Tree Protection Plan included as Appendix A. Tree locations have been taken from the topographical survey provided. Where not included on the topographical survey, they have been determined by measuring distances from features shown on the plan, using a laser measuring device. The following information was recorded for each tree, and is shown in the Tree Schedule included as Appendix B:

- **Number:** an identity number for each tree, prefixed with a “T”, which cross references locations shown on the plan with the schedule in Appendix B. Where a number of trees are located close together and are similar in character and management requirements, they have been treated as a Group under a single number, prefixed with a “G”.
- **Species**: common name.
- **Tree height**: approximate height in metres.
- **Stem diameter**: diameter in millimetres, taken at 1.5m above ground. Where there are a number of stems, stem diameters are recorded in the condition column.
- **Branch spread**: approximate spread in metres to N,S,E and W of the trunk. The approximate branch spread is drawn on the plan.

- **Canopy clearance**: approximate height of the canopy above ground. Where a significant, low lateral branch is present, its height and direction of growth is included in the Condition column.
- **Age class**: Young, Semi-mature, Early mature, Mature, Over-mature, Veteran.
- **Condition**: features that affect the safe useful life expectancy and amenity of the tree, including the presence of decay or any physical defect.
- **Management Recommendations**: recommendations to ensure the health and safety of the tree, within the future development.
- **Estimated Remaining Contribution**: <10 years, 5-15 years, 10-20 years, 15-30 years, 20-40 years, >40 years.
- **Category grading**: tree classification taken from BS 5837:2012, Trees in relation to design, demolition and construction (see Appendix C for details), as follows:
    - Category U: Unsuitable for retention, trees with less than 10 years life expectancy, normally recommended for removal (Red)
    - Category A: high quality trees, able to make a substantial contribution for at least 40 years, normally retained unless there is an over-riding reason for removal and appropriate mitigation. (Green)
    - Category B: moderate quality trees, able to make a significant contribution for at least 20 years, normally retained. (Blue)
    - Category B/C: an intermediate category between categories B and C (not specifically described in BS5837). Trees, which should be retained wherever possible, providing retention does not unreasonably constrain the layout. (Blue)
    - Category C: low quality, in adequate condition to remain for at least 10 years, or young trees <150mm stem diameter. Trees which can be removed to allow the desired layout or new planting. (Grey)

  For category A, B and C trees, a subcategory has been allocated, providing information on the reasons for selection of a specific category, as follows:
    - Subcategory 1: mainly arboricultural values.
    - Subcategory 2: mainly landscape values.
    - Subcategory 3: mainly cultural values, including conservation.
- Trees have been classified irrespective of the possible proximity to future construction. The BS 5837 category is colour coded, as indicated above, on the plan included as Appendix A.
- **Protection Distance:** the protection distance in metres required to provide the Root Protection Area recommended in BS 5837, assuming a circular area centred on the tree.
- **Root Protection Area (RPA):** the area in m^2, as recommended in BS 5837, to provide sufficient rooting area to ensure tree survival and which, in most situations, should be fenced off to prevent root damage from construction activities.

3 SURVEY LIMITATIONS

3.1 No internal decay devices, or other invasive tools to assess tree condition, were used.

3.2 No soil excavation or root inspection was carried out.

3.3 This survey has not considered the effect that trees or vegetation may have on the structural integrity of future building through subsidence or heave.

3.4 The tree survey has been undertaken for planning purposes. Although any obvious structural defects have been noted, a Tree Hazard Assessment has not been carried out. Mature trees close to highly populated areas or public highways should normally be checked for safety annually, by a suitably qualified person.

4 LEGAL PROTECTION OF TREES

4.1 The Wiltshire Council website was viewed on 15.12.2023, which showed that the site does not contain any Tree Preservation Orders, but that it is within a Conservation Area. The presence of Planning Conditions currently attached to the site, was not checked.

4.2 Since the site is covered by a Conservation Area, six weeks notification must be given to the local planning authority of any intended tree surgery works, to allow them the option of placing a Tree Preservation Order.

4.3 Once planning permission has been granted, provided the application clearly shows any trees to be removed or pruned, this overrides protection provided by Tree Preservation Orders or Conservation Areas, provided the work is necessary to implement the approved development. If not essential, a separate tree work application will need to be submitted for trees protected by a Tree Preservation Order.

5 ARBORICULTURAL METHOD STATEMENT

5.1 Site Overview

5.1.1 The proposal is for demolition of existing garage and erection of 2no. new dwellings with associated access, parking, landscaping and private amenity space. The proposed site plan is included as Appendix F and details have been added to the survey drawing, along with tree details, to create the Tree Protection Plan attached as Appendix A.

5.1.2 The site is part of the garden of Forest View. Access to the new development is to be via the existing driveway off the A338. The driveway is to be extended to provide access to the rear part of the site. The garden area contains numerous trees and shrubs, with lawn areas to the north and south of the existing dwelling. Vegetation is providing screening to site boundaries.

5.2 Tree Work

5.2.1 Details of proposed tree works are included in the Tree Schedule included as Appendix B.

5.2.2 Twenty-two trees and eight tree and shrub groups are proposed for removal, as detailed in section 6.1 below.

5.2.3 All tree work must be undertaken to the standards set out in BS 3998:2010 Tree work – Recommendations.

5.3 Root Protection Areas

5.3.1 Root Protection Areas are shown for all trees in the Tree Schedule included as Appendix B. They are also shown for all retained trees, as circular areas centred on the trunk, on the Tree Protection Plan included as Appendix A. Where there are physical obstructions to root growth the Root Protection Area should be shown as an equivalent area that is more likely to reflect actual root growth. The Root Protection Area shows the area around a tree in which all construction activity must normally be excluded, unless appropriate protection measures are implemented.

5.4 Tree Protection Fencing

5.4.1 Tree Protection Fencing must be erected where shown on the Tree Protection Plan, included as Appendix A. This will provide full protection of the Root Protection Areas of all retained trees within the site, other than for:

- areas hatched in blue on the Tree Protection Plan, where No-Dig Construction must be used, as described in section 5.5 below, to protect underlying roots.

- areas shaded and hatched cyan on the Tree Protection Plan, indicating Ground Protection Areas, where roots must be protected, as described in section 5.6 below.

5.4.2 Tree works can be completed before Tree Protection Fencing is erected, however no contractors plant or vehicles must be allowed to track within the Root Protection Areas unless ground protection panels are laid.

5.4.3 Tree Protection Fencing must be from weldmesh panels, at least 2m high, securely fixed, with wire or scaffold clamps, to a rigid framework. This framework must be constructed from scaffold tubes with vertical tubes, at a maximum interval of 3m and driven into the ground at least 0.6m. The structure must be well braced to resist impacts, constructed as per Figure 2 of BS5837:2012, which is reproduced in Appendix D. Alternatively, weldmesh panels can be supported on blocks, providing the blocks are pinned to the ground with road pins, or similar, and the panels are braced, as per Figure 3 of BS5837:2012, which is also reproduced in Appendix D.

5.4.4 After erection of Tree Protection Fencing and installation of ground protection, two days' notice must be given to the local planning authority before demolition or construction, including any ground work, starts on site.

5.4.5 Tree Protection Fencing must be maintained and retained for the duration of the works, or until such time as agreed in writing with the local planning authority.

5.4.6 Weatherproof notices must be fixed to the Tree Protection Fencing, and maintained, stating:-

TREE PROTECTION AREA
KEEP OUT
TREES ENCLOSED BY THIS FENCE ARE PROTECTED BY PLANNING CONDITIONS AND CONSERVATION AREA STATUS
CONTRAVENTION MAY LEAD TO CRIMINAL PROSECUTION
THE FOLLOWING MUST BE OBSERVED BY ALL PERSONS:

- The Protection Fence must not be moved
- No person or machine must enter the area
- No materials or spoil must be deposited
- No excavation must be permitted

ANY INCURSION INTO THE PROTECTED AREA MUST BE WITH THE WRITTEN PERMISSION OF THE LOCAL PLANNING AUTHORITY

5.5 No-Dig Construction Area

5.5.1 The No-Dig Construction area is shown hatched blue on the Tree Protection Plan included as Appendix A. This covers an area within Root Protection Areas where new hard surfacing is to be construction on an existing soft area.

5.5.2 Where existing soft areas within No-Dig Construction areas are to be replaced by new hard surfacing, they must be constructed without excavation apart from the removal of turf/organic matter, which must be carried out by hand. Engineering details must avoid localised compaction, using both a two dimensional geogrid, and a three dimensional cellular confinement system as integral components of the sub-base. A typical section is shown on the Tree Protection Plan included as Appendix A. As well as being fit for purpose, the design and methodology must protect tree roots, by ensuring the following:-

- topsoil/turf can be removed carefully by hand to a maximum of 50mm, but less if roots are found nearer the surface.
- following leveling with soil or sand, a permeable, non-woven geotextile membrane, must be laid.
- a suitable two dimensional geogrid, such the TriAx Geogrid supplied by Tensar International (www.tensar.co.uk), or the Biaxial Geogrid supplied by Geosynthetics Ltd (www.geosyn.co.uk), must be laid over the entire area and underneath the edging.
- pressure treated timber edging boards, supported by driven stakes must be used.
- a suitable cellular confinement system must then be laid to manufacturers instructions on top of the geogrid. Products that might be considered include Geoweb, supplied by Greenfix (www.greenfix.co.uk) or Cellweb, supplied by Geosynthetics Ltd (www.geosyn.co.uk). The depth of the system must be adequate to take the maximum axle weight, as per manufacturers guidance.
- the cellular confinement system must be filled with clean (no fines), washed angular, 4/20mm, stone to provide load support, while allowing air and moisture to permeate to the root zone.
- a further permeable, non-woven geotextile membrane, such as TreetexT300, or an alternative approved product which has similar oil trapping qualities, must be laid over the cellular confinement system.
- a porous, surfacing material, free from contaminants, must then be laid. Either sand bedding and block paving, gravel or permeable tarmac would be suitable.
- removed turf/topsoil can be used to grade surrounding ground levels.

5.5.3 Site traffic, including pedestrians, must not be allowed on the No-Dig area until roots are protected by the No-Dig surfacing, or unless suitable ground protection has been laid. If access is required across No-Dig areas for plant, before the No-Dig surfacing is laid, ground protection panels must be laid. Either Trakmats (supplied by the Marwood Group, www.marwoodgroup.co.uk), Groundtrax panels (see www.groundtrax.com), Ground-Guards, as supplied by Greentek (www.greentek.org.uk), or a similar approved product, must be used, laid on top of a compressible layer of sand or woodchips, laid onto a geotextile. If access is required for pedestrians, 25mm plywood or side butting scaffold boards must be laid, on top of a compressible layer of sand or woodchips, laid onto a geotextile.

5.5.4 Alternatively, the build up for the new No-Dig permeable surface can be used for construction traffic providing an adequate depth of cellular confinement system is used for the loads anticipated. In this case, the same section detail shown on the Tree Protection Plan must be used but with the sand and porous paving surface replaced with clean stone. This can then be removed together with the underlying geotextile at the end of the construction period and a new geotextile laid and final surface laid.

5.5.5 No-Dig construction will result in an increase in levels. This must be fully taken account of in all other aspects of the design.

5.6 Ground Protection Areas

5.6.1 The Ground Protection Areas, which are shaded cyan on the Tree Protection Plan, contain hard surfacing which is protecting any underlying roots and which must stay in place during the construction period unless further protection measures are implemented.

5.6.2 Hard surfacing in Ground Protection Areas can be replaced if the existing sub-base remains in place and if the new surfacing is permeable.

5.6.3 If the existing sub-base is removed, ground protection must be laid immediately and then No-Dig construction (as per section 5.5) used for the build up. No excavation must be permitted beneath the base course in these areas.

5.6.4 The Ground Protection Areas, which are hatched cyan on the Tree Protection Plan, contain soft areas where ground protection must be laid to protect any underlying roots.

5.6.5 Adjacent to the buildings, where pedestrian movement and erection of scaffolding will take place within the Root Protection Areas of trees, Ground Protection Areas are shown on the plan. The Tree Protection Fencing must be erected 1.2m from the building line, with the ground between the fencing and the building protected by either 25mm plywood or side butting scaffold boards, on top of a compressible layer of sand or woodchips, laid onto a geotextile. Alternatively, scaffold boards can be fixed on a driven scaffold frame, so as to form a suspended walkway.

5.6.6 Ground protection must be laid before any construction starts on site and must be maintained in good condition until all construction operations have been completed. Ground protection must be fit for purpose and be replaced with an alternative product if panels start to move or any sign of ground compaction is seen.

5.7 General measures

5.7.1 No construction activity whatsoever, including routing of underground services, storage of materials or on-site parking, must be allowed within Root Protection Areas, other than that specifically described above.

5.7.2 No mixing or storage of cement, concrete, oil, fuel, bitumen or other chemicals must be permitted within 10m of the trunk of any retained trees, nor in any position where the slope of the ground could lead to contamination of the Root Protection Area.

5.7.3 Fires must not be lit in a position where their flames could extend to within 10m of foliage, branches or trunk.

5.7.4 Landscape works carried out within Root Protection Areas must be undertaken with great care so as not to damage shallow roots. Tractor mounted rotovators or other heavy mechanical cultivation must not be used within the Root Protection Areas.

5.7.5 If any tree shown for retention is removed, uprooted or destroyed, another tree must be planted in the same location, at a size and species to be agreed in writing with the Local Planning Authority.

5.7.6 A copy of this report and the Tree Protection Plan must be kept on site and must be fully understood by the Site Agent.

5.8 Bat roosts

5.8.1 The current legislation makes it a criminal offence to disturb, damage or destroy any bat roost or hibernation area. Contractors must be reminded of their responsibilities and should contact the relevant authorities if any signs of bats are found.

5.9 Birds

5.9.1 The current legislation makes it a criminal offence to disturb nesting birds. The nesting season is generally assumed to be from 1st March to 31st July, however this can vary depending on species and location. During these months a careful inspection must be made before work commences and works must be postponed if active nests are found.

6 ARBORICULTURAL IMPACT ASSESSMENT

6.1 The following trees / tree and shrub groups, categorized as per BS 5837 (see Appendix C for details), are proposed for removal:

- Category U – unsuitable for retention: Eight trees – T17, T27, T41, T44, T48, T49, T50 and T51, and one group – G47.
- Category C – low quality: Five trees – T4, T6, T15, T46 and T52, and seven groups – G13(section), G14(select trees), G16, G29, G37 and G42.
- Category B – moderate quality: Nine trees:
    - T2 – a 7.5m, mature Persian silk tree (*Albrizia julibrissin*).
    - T18 – an 8m, early mature cherry.
    - T20 – a 10m, mature weeping willow.
    - T30 – a 13m, early mature birch.
    - T31 – a 11.5m, mature rowan.
    - T32 – an 11m, semi-mature beech.
    - T33 – a 12.5m, early mature weeping willow.
    - T34 – a 13m, early mature deodar cedar.
    - T39 – a 6m, early mature weeping birch.

6.2 The site layout specifies the removal of a nine moderate quality trees however it is understood that the layout has been developed following detailed discussion with the Wiltshire Council planning officer and further, that the conservation and ecology officer consultation responses show that they have no objections to the proposed development.

6.3 The Leyland cypress G29 are providing a high level of screening to the existing garden however the trees have been allowed to grow out to the point where they have become oppressive and are casting dense shade across this part of the site. A photo of the trees is included in Appendix E. It is recommended that a new mixed species native hedge is planted inside the boundary which will provide replacement screening and also benefit wildlife.

6.4 Protection measures have been specified to protect the Root Protection Area of all retained trees.

6.5 Although preservation of Root Protection Areas is deemed to protect tree roots, in some cases buildings may need to be set further back to ensure the future sustainability of trees. If buildings are too close to trees, future occupiers may be likely to seek the reduction, or removal of trees, if they are cutting out excessive sunlight or providing a claustrophobic or threatening environment. Section 5.2.2 of BS 5837:2012 states that "an indication of potential direct obstruction of sunlight can be illustrated by plotting a segment with a radius from the centre of the stem equal to the height of the tree, drawn from due North West to due East, indicating the shadow pattern through the main part of the day." Shading patterns for key trees have been shown on the plan. This shows that new dwellings are outside potential shading areas. There will be no large trees close enough to the new dwellings to produce a claustrophobic or threatening environment for future residents. Instead, retained trees will contribute to the amenity of the site and provide screening between properties. The proposals will not therefore adversely affect the sustainability of retained trees.

7 REFERENCES

- *BS5837:2012 Trees in relation to design, demolition and construction – Recommendations.*
- *BS3998:2010 Tree Work. Recommendations.*
- *The use of Cellular Confinement systems near Trees: a guide to good practice Arboricultural Association Guidance Note 12.*

APPENDIX A

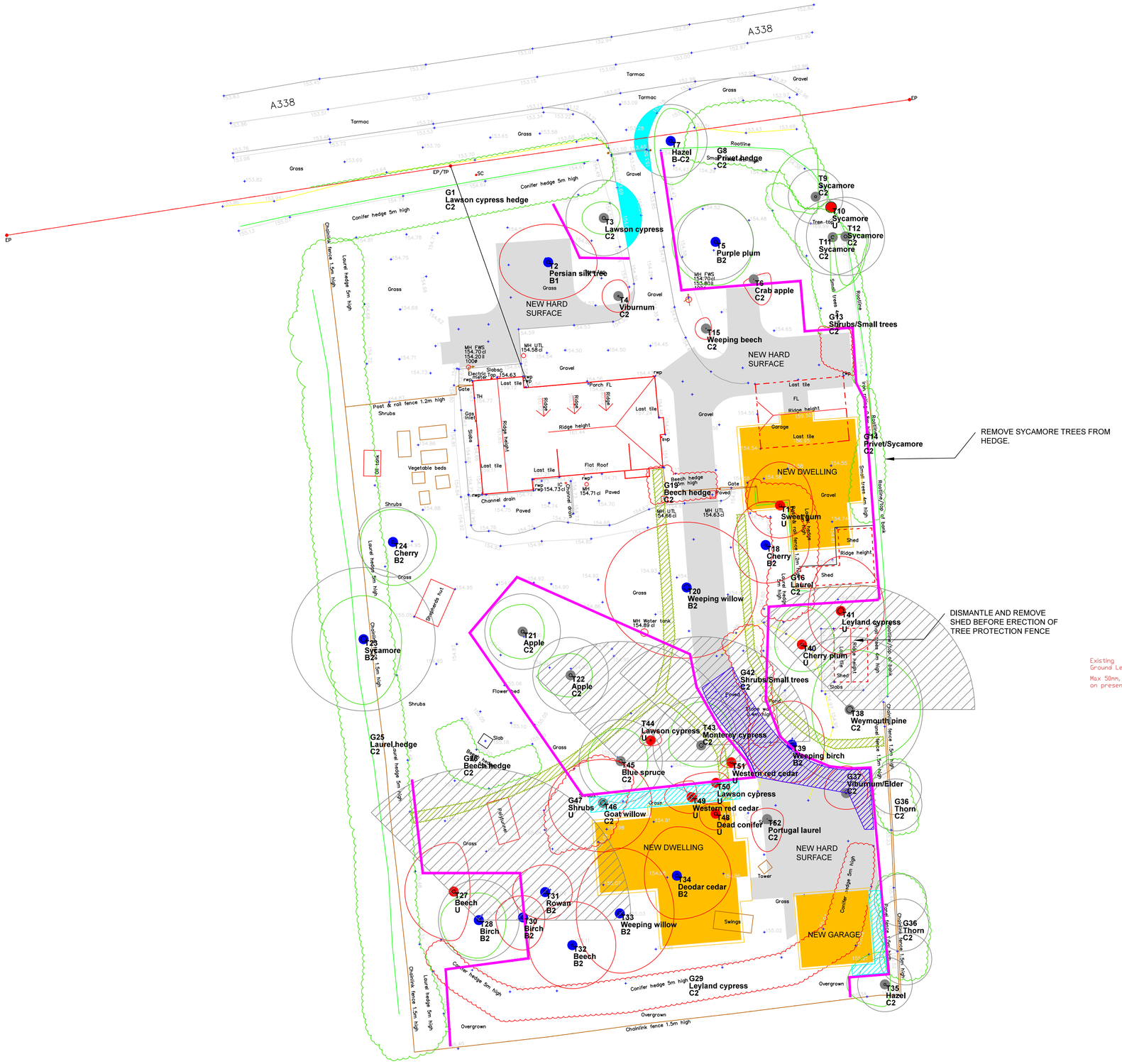

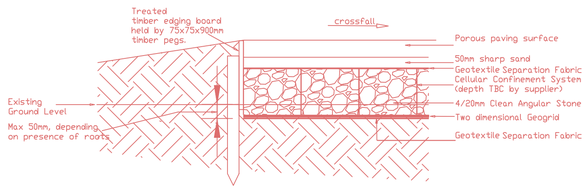

DRIVE CONSTRUCTION DETAIL IN NO-DIG AREA

Key

- Category U
- Category A
- Category B
- Category C
- Crown spread: retained trees
- Trees For Removal
- Root Protection Area
- Tree Protection Fence
- No-Dig Construction
- Ground Protection Area: existing hard surface
- Ground Protection Area: existing soft surface
- BS 5837 Shade Area

SJ Stephens Associates
Savernake Barn, Stokke Common
Great Bedwyn
Marlborough
Wiltshire SN8 3LL
01672 871862
www.sjstephens.co.uk

JOB TITLE
FOREST VIEW

DRAWING TITLE
TREE PROTECTION PLAN

DRAWING NUMBER	REV
2204–01	

REVISIONS

SCALE	DATE	DRAWN BY
1:200 at A1	DEC 23	cf

Tree/ Group No.	Species	Height (m)	Stem Diam. at 1.5m (mm)	Branch Spread (m)				Canopy Cleara -nce (m)	Age Class	Observations	Management Recommendations	Estimated Remaining Contribution (years)	BS 5837 Category Grading	Protect -ion Distnce (m)	Root Protect. Area (m2)
				N	S	E	W								
G1	Lawson cypress hedge	5	100 - 150					0	Mature	Some browning foliage but generally good vitality.		10-20	C2	1.8	10
T2	Persian silk tree (*Albrizia julibrissin*)	7.5	310	3.5	3.5	4.5	4.5	2.5	Mature	Rare and unusual garden tree. Two stems from 1m, with western stem forked at 1.3m - stems 180, 180 & 180mm diameter. Minor deadwood.	Remove to facilitate development.	20-40	B1	3.7	43
T3	Lawson cypress	8	est 290	1.5	1.5	1.5	2	0.0	Mature	Dense foliage to ground - base not inspected. Shaded out against hedge.		10-20	C2	3.5	38
T4	Viburnum	3	140	1.5	1.5	1	1.5	0.0	Mature	Shrub with approx 30 stems, average 25mm.	Remove to facilitate development.	5-15	C2	1.7	9
T5	Purple plum	7.5	290	3.5	4	3.5	4	1.0	Mature	Three-way fork at 1.4m. Congested crown.		15-30	B2	3.5	38
T6	Crab apple	3	80	0	2.5	1.5	1	0.0	Semi-mature	Stem at 45º to southeast. Good vitality.	Remove to facilitate development.	10-20	C2	1.0	3
T7	Hazel	6	280	3	4	2.5	1.5	0.2	Mature	Approx 12 stems, average 80mm. Side cut back to driveway side. Power line through crown.		15-30	B-C2	3.4	35
G8	Privet hedge	5.5	50 - 75					0.2	Mature	Outgrown. Ivy.		10-20	C2	0.9	3
T9	Sycamore	6.5	210	4.5	1.5	0	4	3	Early mature	Two stems from base, with eastern stem forked at 1.1m - 90, 110 & 160mm - all growing to west. Poor form and structure.	Consider removal to allow new tree planting.	10-20	C2	2.5	20
T10	Sycamore	4	est 1000	0.5	0.5	0.5	0.5	2	Over mature	Large stem topped at 2.8m. Areas of decay. Fresh growth from top and base. Ivy. Habitat value.		<10	U	12.0	452
T11	Sycamore	6.5	290	0	5	3	0	2.5	Early mature	Three stems, est average 170mm. Crown swept to southeast. Engulfed in ivy.	Consider removal to allow new tree planting.	15-30	C2	3.5	38
T12	Sycamore	9.5	est 300	0	4.5	2	1	3	Early mature	Crown swept to south. Engulfed in ivy.	Consider removal to allow new tree planting.	15-30	C2	3.6	41
G13	Shrubs/Small trees	1.5 - 6	50 - 150					0	Young-Mature	Species including laurel, lilac, berberis, with Leyland cypress and thorn. Young beech and cherry. Dense ivy. Unmanaged.	Remove section as required to facilitate development.	5-15	C2	1.8	10
G14	Privet/Sycamore	5 - 8.5	75 - 230					1	Over mature	Outgrown hedge with occasional semi-mature sycamore growing through - no trees of merit.	Remove semi-mature sycamore to facilitate development. Cut back privet to provide clearance for construction.	5-15	C2	2.8	24
T15	Weeping beech	2	100	1	1	0.5	1	0	Semi-mature	Weeping crown from 1.2m. Low quality tree with vigorous upright shoots.	Remove to facilitate development.	10-20	C2	1.2	5
G16	Laurel	3 - 6	100 - 200					0	Mature	Outgrown hedge.	Remove to facilitate development.	15-30	C2	2.4	18

Tree/ Group No.	Species	Height (m)	Stem Diam. at 1.5m (mm)	Branch Spread (m)				Canopy Cleara -nce (m)	Age Class	Observations	Management Recommendations	Estimated Remaining Contribution (years)	BS 5837 Category Grading	Protect -ion Distnce (m)	Root Protect. Area (m2)
				N	S	E	W								
T17	Sweet gum	9	270	4	3	3	3	2	Early mature	Two stems from 1.5m. Large tear out wound from 1.8-2.2m, east side, where a major stem has broken out. Showing good vitality but life expectancy limited due to damage.	Remove to facilitate development.	<10	U	3.2	33
T18	Cherry	8	200	4	3.5	4	3	1.2	Early mature	Stem fork at 1.4m & 1.6m. Stems - 100 & 170mm. Good vitality.	Remove to facilitate development.	20-40	B2	2.4	18
G19	Beech hedge	2.5 - 3	50 - 75	0	0	0	0	0.2	Semi-mature		Remove to facilitate development.	20-40	C2	0.9	3
T20	Weeping willow	10	540	6	6.5	6.5	7.5	1.5	Mature	Attractive, feature tree. Good vitality.	Remove to facilitate development.	>40	B2	6.5	132
T21	Apple	5	290	2.5	2.5	2	3	1.8	Mature	Stem fork at 1m - 170 & 230mm, with further forks above. Occasional cavities in old pruning wounds.		15-30	C2	3.5	38
T22	Apple	4	290	2	2	2	3	1.2	Mature	Three stems from 1.2m - 120, 180 & 190mm. Large lateral to southwest from 0.6m. Major deadwood. Cavities in old pruning wounds.		10-20	C2	3.5	38
T23	Sycamore	12	est 550	4	6	3.5	4	4	Early mature	Growing in adjacent property - base not inspected. Stem bifurcates at approx 2m - tight fork. Good crown shape.		>40	B2	6.6	137
T24	Cherry	3.5	270	3	4	4	3	1	Mature	Spreading crown from 1.2m. Good vitality.		20-40	B2	3.2	33
G25	Laurel hedge	3 - 6	75 - 250					0	Mature	Providing screening along boundary.		15-30	C2	3.0	28
G26	Beech hedge	3	50 - 75					0	Semi-mature	Internal garden hedge.		20-40	C2	0.9	3
T27	Beech	11	330	4.5	4.5	1.5	4.5	1.5	Semi-mature	Bark missing, northeast side, with heartwood exposed to 4m. Dieback throughout crown.	Remove.	<10	U	4.0	49
T28	Birch	14	310	2.5	3.5	2.5	3.5	1.5	Early mature	Good form and structure.		20-40	B2	3.7	43
G29	Leyland cypress	6	150 - 200					0.3	Early mature	Line of trees forming dense hedge. Garden side cut back to height of 1.8m leaving area of brown foliage. Crowns grown out above. Vigorous.	Remove to faciliate development, including new soft landscaping.	10-20	C2	2.4	18
T30	Birch	13	290	2	3	2	2.5	1.2	Early mature	Reasonable tree.	Remove to facilitate development.	20-40	B2	3.5	38
T31	Rowan	11.5	340	2.5	2.5	2.5	3	1.8	Mature	Stem bifurcates at 1.2m - 240 & 240mm. Basal growth.	Remove to facilitate development.	20-40	B2	4.1	52
T32	Beech	11	190	4	4	4	4	1	Semi-mature	Vigorous young tree. Lack of branches to southwest through mid crown section.	Remove to facilitate development.	>40	B2	2.3	16
T33	Weeping willow	12.5	400	6	5.5	5	4	1.5	Early mature	Stem bifurcates at 4.5m. Lower branches shaded out. Good vigour.	Remove to facilitate development.	>40	B2	4.8	72

Tree/ Group No.	Species	Height (m)	Stem Diam. at 1.5m (mm)	Branch Spread (m)				Canopy Cleara -nce (m)	Age Class	Observations	Management Recommendations	Estimated Remaining Contribution (years)	BS 5837 Category Grading	Protect -ion Distnce (m)	Root Protect. Area (m2)
				N	S	E	W								
T34	Deodar cedar	13	est 320	4.5	4	5	3	0.2	Early mature	Ivy over stem. Bramble through south side of lower crown. Low branches to northwest shaded out. Good vitality. Holly and elder around base.	Remove to facilitate development.	>40	B2	3.8	46
T35	Hazel	8	210	3	2	0.5	3.5	0.3	Early mature	Approx 12 stems, average 60mm. Vigorous growth from rootstock with minor remnants of corkscrew willow.	Coppice to approx 0.3m, and allow to re-shoot.	15-30	C2	2.5	20
G36	Thorn	5 - 8	75 - 200					1.5	Early mature	Line of trees outside fence. Crowns extending up to 2.5m over site. All low quality. Dense ivy.	Cut back overhanging crowns to boundary line to facilitate construction of new garage.	15-30	C2	2.4	18
G37	Viburnum/Elder	6	150	2.5	1.5	2	2	0	Mature	Large multi stem shrub with elder growing through centre.	Remove to facilitate development.	5-15	C2	1.8	10
T38	Weymouth pine	11.5	560	5.5	5	6.5	3.5	1.5	Early mature	Two stem from base - 500 & 250mm, with further main stem broken out at base leaving large wound. Smaller stem growing up through and becoming fused to laterals from main stem. Ivy and vegetation obscures basal inspection.	Clear fallen stem and basal vegetation to facilitate future inspection.	10-20	C2	6.7	142
T39	Weeping birch	6	300	4	3.5	3	4	1.5	Early mature	Southwest side of crown damaged, with broken and hanging branches. Two stems above wide fork at 1.6m.	Remove to facilitate development.	20-40	B2	3.6	41
T40	Cherry plum	6.5	240	3.5	2.5	3	2.5	1.5	Early mature	Multiple pruning wounds and old wounds. Numerous *Phellinus* fungal brackets on stems. Four stems at 1.5m, average 120mm.		<10	U	2.9	26
T41	Leyland cypress	10	570	5	4	4	3	0.5	Early mature	Multi stem from base. Central stems previously topped at 1.5m and now dead. Approx 8 live stems around outer edges, average 200mm. Some stems broken out. Very low quality.	Remove.	<10	U	6.8	147
G42	Shrubs/Small trees	1.5 - 5	50 - 90					0	Young-Mature	Species including dogwood, buddleja, cherry plum, viburnum and laurel. All low quality.	Remove.	5-15	C2	1.1	4
T43	Monterey cypress	10	est 370	4	2	3	3	1	Early mature	Branches shaded out to south side. Ivy over stem. Low quality tree.		5-15	C2	4.4	62
T44	Lawson cypress	7.5	150	1	0.5	1	1	0	Mature	Fastigiate variety with variegated foliage in lower half. Shaded out south side.	Remove.	<10	U	1.8	10
T45	Blue spruce	11	320	3	3	2.5	3	1.5	Early mature	Low branches to south shaded out.		20-40	C2	3.8	46
T46	Goat willow	9	450	4	4.5	4.5	5	1.5	Early mature	Eight stems, average 160mm. Low quality tree.	Remove to facilitate development.	15-30	C2	5.4	92

Tree/ Group No.	Species	Height (m)	Stem Diam. at 1.5m (mm)	Branch Spread (m)				Canopy Cleara -nce (m)	Age Class	Observations	Management Recommendations	Estimated Remaining Contribution (years)	BS 5837 Category Grading	Protect -ion Distnce (m)	Root Protect. Area (m2)
				N	S	E	W								
G47	Shrubs	0.5 - 2	25					0	Mature	Species including rose, callicarpa, viburnum davidii, euonymus. Bramble, ivy and nettles.	Remove to facilitate development.	<10	U	0.3	0
T48	Dead conifer	8	300	1	1.5	1	1.5	0	Dead	Eleven stems, average 90mm. Completely dead.	Remove.	<10	U	3.6	41
T49	Western red cedar	9	320	1.5	1.5	0.5	2.5	0	Early mature	Ten stems, average 100mm. Shaded out by surrounding trees. Live foliage only at top and west side.	Remove.	<10	U	3.8	46
T50	Lawson cypress	8.5	270	1	2	1.2	3	0	Early mature	Multiple stems ascending from main stem at 1.4m, with further small stems to west side of base. Shaded out to southwest and west and north. Low quality tree.	Remove.	<10	U	3.2	33
T51	Western red cedar	9.5	230	2	0.5	1.5	1	1	Early mature	Variety with variegated foliage - Zebrinus. Two stems - 120 & 200mm. Low quality.	Remove.	<10	U	2.8	24
T52	Portugal laurel	3	70	1	3	1.5	1.5	0	Early mature	Large shrub.		10-20	C2	0.8	2

BS 5837:2012, Table 1 Cascade chart for tree quality assessment

Category and definition	Criteria (including subcategories where appropriate)			Identification on plan
Trees unsuitable for retention (see Note)				
Category U Those in such a condition that they cannot realistically be retained as living trees in the context of the current land use for longer than 10 years	• Trees that have a serious, irremediable, structural defect, such that their early loss is expected due to collapse, including those that will become unviable after removal of other category U trees (e.g. where, for whatever reason, the loss of companion shelter cannot be mitigated by pruning) • Trees that are dead or are showing signs of significant, immediate, and irreversible overall decline • Trees infected with pathogens of significance to the health and/or safety of other trees nearby, or very low quality trees suppressing adjacent trees of better quality *NOTE Category U trees can have existing or potential conservation value which it might be desirable to preserve; see **4.5.7**.*			See Table 2
	1 Mainly arboricultural qualities	**2 Mainly landscape qualities**	**3 Mainly cultural values, including conservation**	
Trees to be considered for retention				
Category A **Trees of high quality** with an estimated remaining life expectancy of at least 40 years	Trees that are particularly good examples of their species, especially if rare or unusual; or those that are essential components of groups or formal or semi-formal arboricultural features (e.g. the dominant and/or principal trees within an avenue)	Trees, groups or woodlands of particular visual importance as arboricultural and/or landscape features	Trees, groups or woodlands of significant conservation, historical, commemorative or other value (e.g. veteran trees or wood-pasture)	See Table 2
Category B **Trees of moderate quality** with an estimated remaining life expectancy of at least 20 years	Trees that might be included in category A, but are downgraded because of impaired condition (e.g. presence of significant though remediable defects, including unsympathetic past management and storm damage), such that they are unlikely to be suitable for retention for beyond 40 years; or trees lacking the special quality necessary to merit the category A designation	Trees present in numbers, usually growing as groups or woodlands, such that they attract a higher collective rating than they might as individuals; or trees occurring as collectives but situated so as to make little visual contribution to the wider locality	Trees with material conservation or other cultural value	See Table 2
Category C **Trees of low quality** with an estimated remaining life expectancy of at least 10 years, or young trees with a stem diameter below 150 mm	Unremarkable trees of very limited merit or such impaired condition that they do not qualify in higher categories	Trees present in groups or woodlands, but without this conferring on them significantly greater collective landscape value; and/or trees offering low or only temporary/transient landscape benefits	Trees with no material conservation or other cultural value	See Table 2

Default specification for protective barrier

Figure 2

Key

1. Standard scaffold poles
2. Heavy gauge 2 m galvanised tube and welded mesh infill panels
3. Panels secured to uprights and cross-members with wire ties
4. Ground level
5. Uprights driven into the ground until secure (minimum depth 0.6 m)
6. Standard scaffold clamps

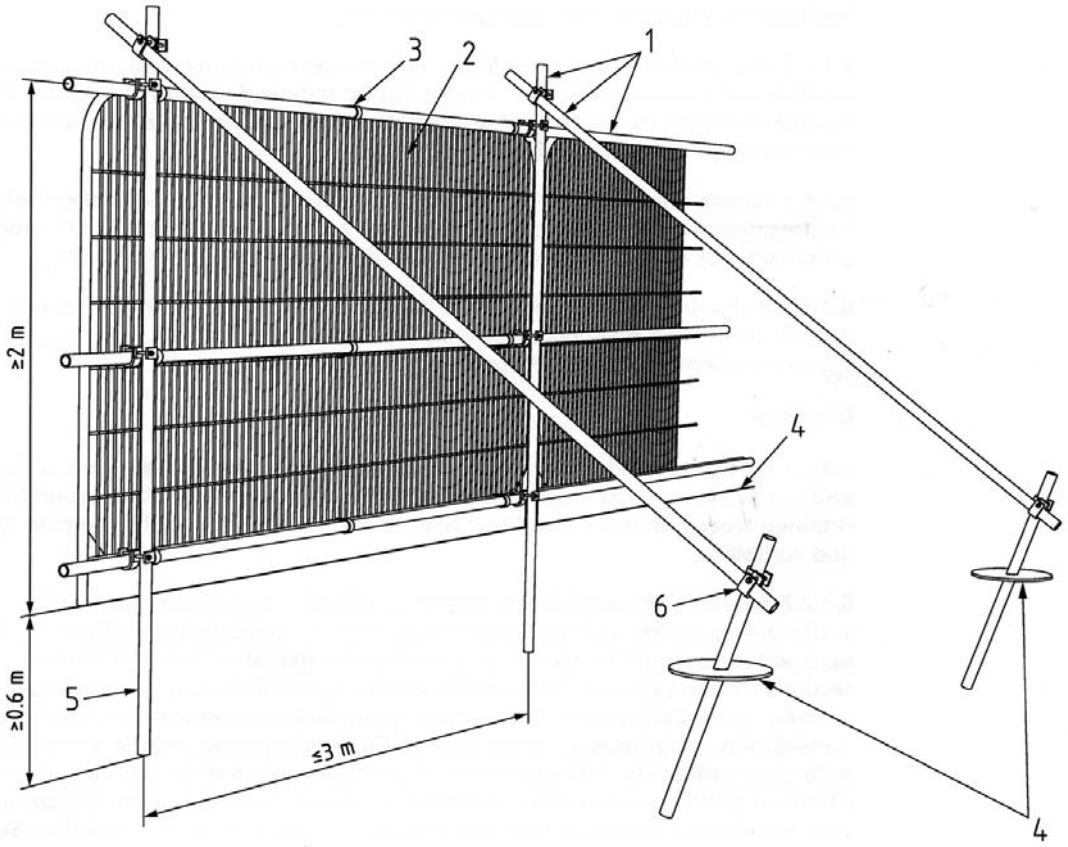

Examples of above-ground stabilising systems

Figure 3a

Stabiliser strut with base plate secured with ground pins

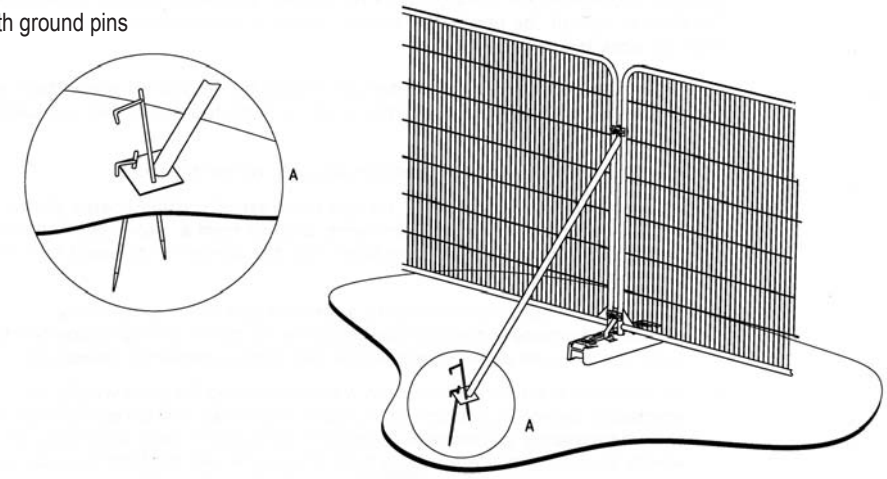

Figure 3b

Stabiliser strut mounted on block tray

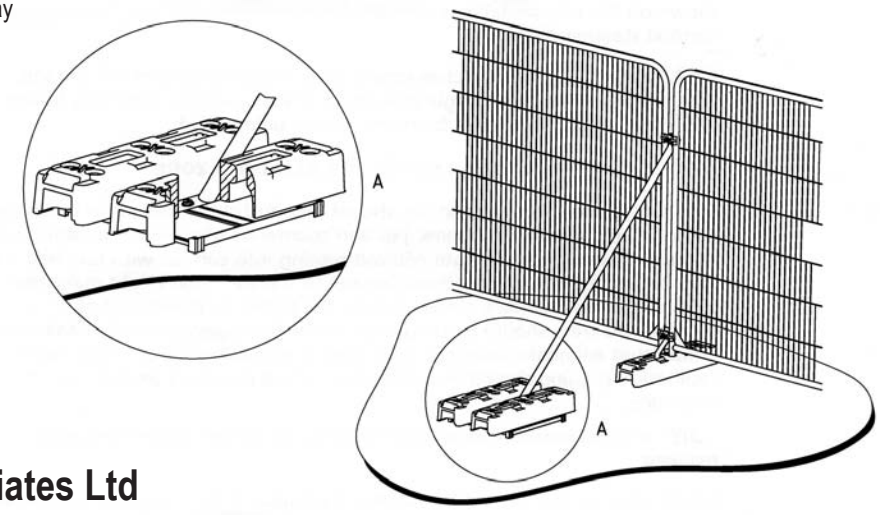


T1
T3
G2
T4

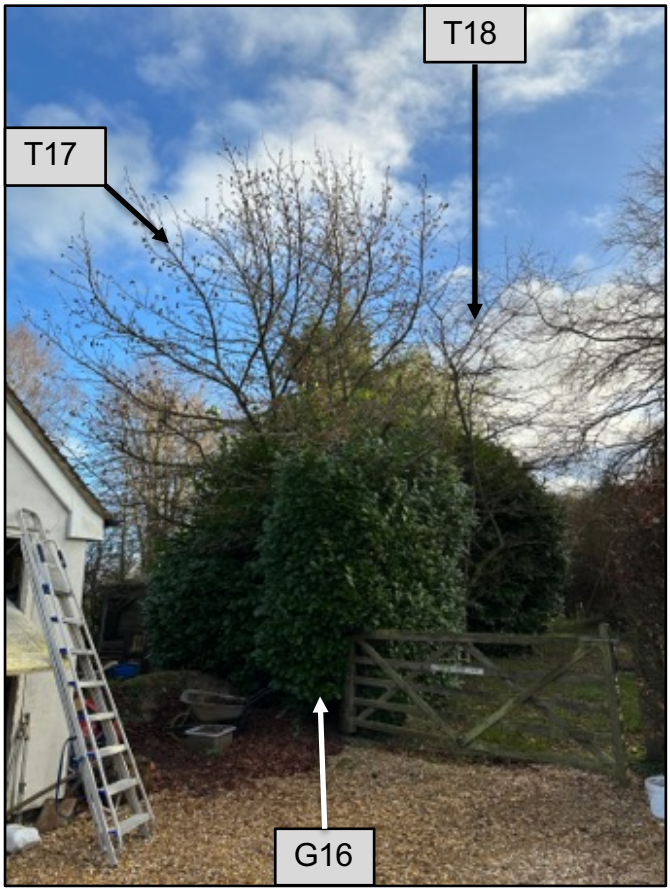
T18
T17
G16


T39
T38
T40



Weeping willow, T33.



Blue spruce, T45, Lawson cypress, T44, and Monterey cypress, T43.



Above: Trees in southwest area of site.

Below: Leyland cypress hedge G29 to inside of rear boundary.



Above: Deodar cedar, T34, with weeping willow, T33, to rear.
Below: Weymouth pine, T38.







revisions int date

Contractors, Sub Contractors and Suppliers are to check all relevant dimensions and levels of site and buildings before commencing any shop drawings or building work.

This drawing is copyright and may not be reproduced in any part or form without the written consent of Fowler Architecture & Planning.

project

FOREST VIEW
EAST GRAFTON

drawing

site plan

scale 1:200 @ A1

date MAY 2023

drawing no 200402 – 03

A rev

FOWLER ARCHITECTURE & PLANNING

39 High Street
Pewsey
Wiltshire
SN9 5AF

01672 569444
enquiries@faap.co.uk