# BS5837 Tree Survey and Arboricultural Method Statement

# at

## Cleeve House, Trowbridge Road, Seend, Wiltshire. SN12 6PG

wrc trees
ARBORICULTURAL CONSULTANTS

Author: Steve Woollard (Cert. Ed, Cert Arb (RFS), PTI, QTRA).
Checked: Rick Gunning (MSc, BSc (Hons))

**WESSEX RURAL CRAFTS LTD**
REGISTERED IN ENGLAND & WALES · COMPANY No. 600252. · VAT 159 0141 24 · REGISTERED OFFICE: 8A HOLLYBUSH · HORNINGSHAM · WILTSHIRE · BA12 7LE· T: 01985 220457/01985 844594

## Contents

1: Instruction

2: Tree Survey

3: Site Details

4: Proposals

5: Drawings

6: Statutory Protection

7: Summary

8: Findings

9: Conclusion

## Appendices

Appendix 1: Arboricultural Method Statement

Appendix 2: BS5837 Tree Survey

Appendix 3: Tree Survey Explanatory Notes

Appendix 4: Tree Location Plan

## 1: Introduction

1.1. WRC were instructed by Simon Cooper of Cooper and Sons Property Ltd to inspect trees on land at Cleeve House, Trowbridge Road, Seend, SN12 6PG, in relation to British Standard 5837:2012 Trees in Relation to Design, Demolition and Construction– Recommendations, and to provide recommendations to reduce the impact of development where feasible.

## 2: Tree Survey

2.1. The tree survey was carried out on 11th December 2023. The weather conditions were sunny.

2.2. The survey was of a preliminary nature undertaken from ground level. No invasive investigations or climbing inspections were undertaken to confirm visual or audible signs of defect or debility and no tissue or soil samples were taken. All dimensions recorded were measured with a dbh tape or hypsometer as appropriate to the task.

## 3: Site Details

3.1. The site is in the southeast corner of the curtilage of Cleeve House. The site is fenced to the south and southeast and is lawned to the west. A bank and tree cover lie to the north and east. The site is not visible to the public due to the location of the bank and tree cover, other than from farmland to the south.

## 4: Proposals

4.1. The proposed development is for five rows of ten solar panels supported by ground screws. The ground screws will be inserted to a depth of one metre using hand-held equipment. Services will run overground to the north, secured using the same ground screw system and method of installation.

## 5: Drawings

5.1. The Tree Location Plan (Appendix 4) indicates tree positions and notional RPAs. The proposed position of the solar panels is not illustrated on the drawing to allow for repositioning.

## 6: Statutory Protection

6.1. The Wiltshire Council Planning Explorer Map indicates that all trees considered by this survey are protected by the Tree Preservation Order E/5 Cleeve House, Seend.

6.2. This report aims to assess which trees are worthy of retention and how the proposed construction may affect them.

## 7: Summary

7.1. The arboricultural features in the immediate vicinity of the site are the cut leaf beech T1, the oak T2 and the mixed species group G2. All are considered to be Category B trees and of moderate quality. T2 and G2 offer significant visual amenity to the site and will form screening for the proposed development. T1 will have to be removed to facilitate the proposed development, and its loss should be mitigated by planting elsewhere within the curtilage of Cleeve House. Mixed species group G1 is considered to be Category C and of low quality. G1 should be removed to facilitate the proposed development.

7.2. Tree protection methods (fencing) must be used to reduce the impact of the proposed development upon retained trees and positioned at the southern edge of the Root Protection Area (RPA) marked by a yellow line on the Tree Location Plan.

7.3. If the final position of the solar panels encroaches into the RPAs of T2 and G2, the use of the proposed ground screws and manual installation will minimise impact to these trees.

7.4. If the trees are to be retained and are protected throughout the development in accordance with this Arboricultural Impact Assessment and Appendix 1: Method Statement, the impact upon the retained trees is likely to be minimised.

7.5. This report considers the trees that may significantly be affected by the proposed development. Any trees not mentioned or not surveyed are sufficiently distant that the proposed works are unlikely to have an influence upon them or are adequately protected by tree protection measures.

## 8: Findings

Please see Appendix 2: BS5837 Tree Survey for specific details.

## 9: Conclusion

9.1. To retain the arboricultural features of the site tree protection measures must be utilised to minimise the impact of the proposals upon the trees. The principles and details of the Arboricultural Impact Assessment and Appendix 1: Method Statement must be followed to reduce the impact upon the retained trees.

## Appendix 1: Method Statement

A pre-commencement meeting prior to the start of any works between the Local Planning Authority (LPA) Arboricultural Officer, appointed Arboricultural Consultant and Site Manager must take place to clarify any additional protection measures required.

To aid the construction phase for the development of the site an Arboricultural Consultant must be appointed to inspect and monitor the site at the start of the works and on an as required basis throughout the construction works to ensure that the protection procedures are adhered to and to assist with addressing further arboricultural issues that may arise.

The position of the protective measures described in 7.2, as shown on the drawing “Tree Location Plan" must be erected prior to any demolition or construction works. This should be under the supervision of the appointed Arboricultural Consultant. Once erected, barriers and ground protection must be considered sacrosanct, and must not be removed or altered without prior recommendation by the appointed Arboricultural Consultant and written approval by the LPA. N.B. Temporary removal will be required for installation of the northernmost solar panels and for the positioning of services.

The protective barriers must be erected according to diagrams contained within this method statement and Appendix 2: BS5837 survey sheet which is based upon the guidelines in BS5837: 2012 ’Trees in relation to construction’. Barriers should be fit for the purpose of excluding construction activity and appropriate to the degree and proximity of work taking place around the retained trees. On all sites, special attention should be paid to ensure that the barriers remain rigid and complete. Barriers must consist of a 1.8m high scaffold framework comprising a vertical and horizontal framework, well braced to resist impacts, with vertical tubes spaced at a maximum interval of 3m. Onto this 1.8m high weldmesh panels should be securely fixed with wire or scaffold. Weldmesh panels on rubber or concrete feet are not resistant to impact and must not be used. If an alternative specification is preferred, then it must be agreed in writing with the Local Planning Authority prior to installation.

Protection Barriers

Protective fencing will be erected in line with BS 5837 (2012) as illustrated below to safeguard retained trees during the construction phase of the development.

The fencing consists of a scaffold framework, well braced to resist impacts, with vertical tubes spaced at a maximum of 3m to add further stability. Onto this, weldmesh panels will be securely fixed with wire or scaffold clamps (see extract of BS 5837 below). Sensitive working methods will be required beyond the fence line, particularly when within RPA margins. Temporary tying back of branches may be required to facilitate implementation of temporary tree protective fencing in relation to lower lying canopies. The protective fencing will remain in position for the duration of the site-wide construction activities.

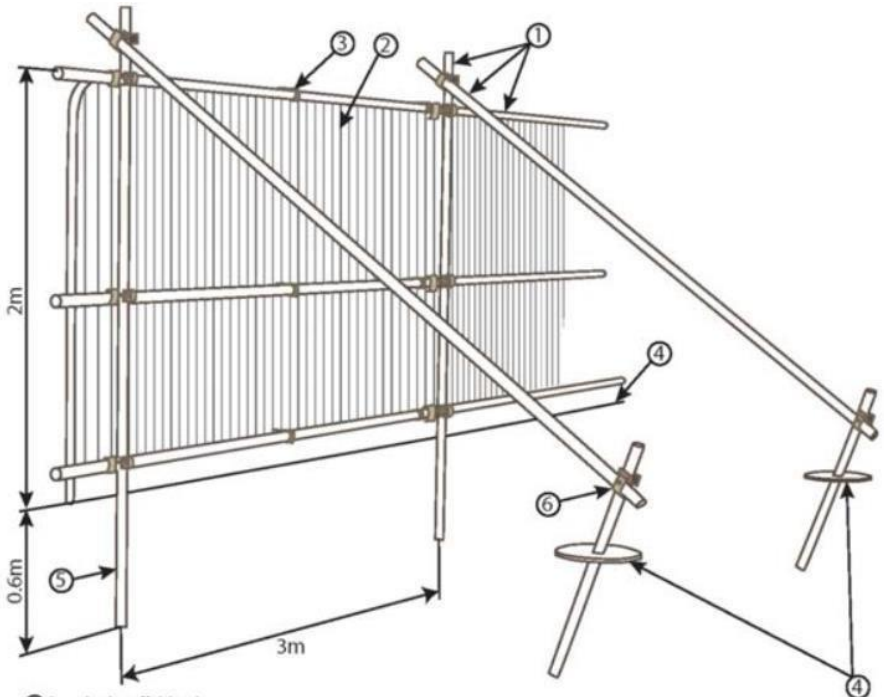


1 Standard scaffold poles
2 Heavy gauge 2m tall galvanised tube and welded mesh infill panels
3 Panels secured to uprights and cross-members with wire ties
4 Ground Level
5 Uprights driven into the ground until secure (minimum depth 0.6m)
6 Standard scaffold clamps

**Appendix 2: BS5837 Tree Survey**

| Ref. | Species | BS5837 Cat. | Ht. (m) | Diam(s) (mm) | Crown Spread (m) | Crown Ht. (m) | Age Class | Phys. Condition | Struc. Condition | Estimated Remaining Contribution (years) | Comments | Recommendations | RPA Area (m2) |
|---|---|---|---|---|---|---|---|---|---|---|---|---|---|
| G1 | Mixed Species | C2 | 4.0 | 100 | N:2<br>E:0.5<br>S:2<br>W:0.5 | 0.0 | Mature | Fair | Collapsing | <10 years | Group of lilac and dead elms. | Remove group to facilitate project. | 230 |
| G2 | Mixed Species | B1,2 | 15.0 | 300 | N:2<br>E:3<br>S:2<br>W:3 | 0.0 | Mature | Fair | Good | 20+ Years | Group of mixed broadleaves and conifers. | Protect trees with protective fencing | 1013 |
| T1 | Cut-leaf Beech *(Fagus sylvatica 'Asplenifolia')* | B1,2 | 15.0 | 770,610 | N:6<br>E:6<br>S:5<br>W:6 | 0.5 | Mature | Fair | Fair | 30+ Years | Low weak union supported by natural brace. Areas of exudate on eastern stem. Deadwood throughout crown typical of species. | Remove tree to facilitate project. | 437 |
| T2 | Pedunculate Oak *(Quercus robur)* | B1 | 13.0 | 590 | N:4<br>E:6<br>S:4<br>W:4 | 0.5 | Early Mature | Fair | Good | 40+ Years | Minor, medium and major deadwood throughout crown. | Remove deadwood over proposed solar panels.<br>Remove first primary branch to northwest.<br>Protect tree with protective fencing | 158 |

## Appendix 3: Tree Survey Explanatory Notes

### Tree Numbers

'T' prefixes have been used to identify individual trees and commence with 'T1'. 'G' prefixes have been used to identify groups of trees.

### Species

Species are listed by their common name, both in the schedule and in the report text.

### Height and Stem Diameter

The stem diameter of trees is measured at 1.5m above ground level and given in millimetres (mm). Tree heights are measured or estimated in metres (m).

### Crown Spread

Radial crown spread is measured in metres and is listed for each of the four cardinal points. The canopy shape for individually surveyed trees depicted on the accompanying plans accurately represents the canopy spread as measured on-site.

### Age Class

The age of each tree is defined as follows:

**Young** - within the first third of life expectancy.

**Semi-Mature** - within the second third of life expectancy.

**Mature** - within the last third of life expectancy.

**Over mature** - Tree in decline; and

**Veteran** – tree that, by recognised criteria, shows features of biological, cultural or aesthetic value that are characteristic of, but not exclusive to, individuals surviving beyond the typical age range for the species concerned. For the purpose of this report the term 'ancient tree' and 'veteran tree' are interchangeable.

### Physiological and Structural Condition

The physiological or structural condition of each tree is defined as either; good, fair, poor or dead.

For each tree, where appropriate, notes on the structural integrity are provided on form, taper, forking habit, storm damage, decay, fungi, pests, etc.

An assessment of a tree's physiological condition is defined as:

**Good –** fully functioning biological system showing expectant vitality for the species i.e., normal bud growth, leaf size, crown density and wound closure.

**Fair –** fully functioning biological system showing below average vitality i.e., reduced bud growth, smaller leaf size, lower crown density and reduced wound closure.

**Poor –** a biological system with limited functionality showing clear physiological decline, disease or significantly below average vitality i.e., limited bud growth, small and chlorotic leaves, low crown density and limited wound closure.

An assessment of a tree's structural condition is defined as:

**Good –** no significant structural defects.

**Fair –** structural defects which could be alleviated through remedial tree surgery or Arboricultural management practices.

**Poor –** structural defects which cannot be alleviated through tree surgery or Arboricultural management practices.

**Estimated Remaining Contribution (ERC) in Years**

The Estimated Remaining Contribution (ERC) for each tree is based on species and existing and apparent physiological and structural condition of the tree. The ERC may affect the proposed development layout, since the longer the tree is likely to live the greater the contribution it will make and the greater the need for retention.

**<10** - Unsuitable for retention

**10 - 20** - Can be retained in the short term

**20 – 40** - Will continue to offer benefits for the foreseeable future

**40+** - Good longevity potential

**Tree Categorisation**

1.12. Categories A, B and C deal with trees that should be a material consideration in the development process and are divided into subcategories that reflect arboricultural, landscape and cultural values.

• **Category Grading A**: Trees of high quality and value, which are in such a condition as to be able to make a substantial contribution from an arboricultural, landscape or cultural perspective.

• **Category Grading B**: Trees of moderate quality and value, which are in such a condition as to make a significant contribution from an arboricultural, landscape or cultural perspective.

• **Category Grading C**: Trees of low quality and value, which are currently in adequate condition to remain until new planting could be established or young trees with a stem diameter below 150mm at 1.5 metres above ground level.

• **Category Grading U**: Trees which are in such a condition that any existing value would be lost within 10 years and which should, in the current context, be removed for reasons of sound arboricultural management.

**Root Protection Areas (RPA)**

The RPAs are considered to contain sufficient rooting volume to ensure the survival of the tree and should be left undisturbed to avoid damage to the roots or rooting environment surrounding the tree unless special construction methods are employed. Any sudden and major alteration of the soil or surface conditions within RPAs will lead to progressive shoot and branch dieback until the roots have adapted to the altered conditions and have been able to source sufficient water and oxygen levels. If damage is progressive or so severe that the tree is unable to adapt, then it is likely that the tree will ultimately die. It should be noted that in general, with increased maturity of a specimen, the ability of that tree to adapt to dramatic alterations in relation to its root system is lessened.

The plan located to the rear of this report shows the approximate extent of Root Protection Areas (RPAs) marked in grey hatching. The RPAs have been calculated in accordance with the methodology set out within Appendices C and D of BS5837: 2012, using the stem diameter dimensions obtained during the site visit.

**Limitations**

The comments made are based on observable factors present at the time of inspection and are based on maximising the trees' safe life expectancy given their existing context. Although the health and stability of trees in their current context is an integral part of their suitability for retention, it must be stressed that this report is not a tree risk assessment and should not be construed as such. While every attempt has been made to provide a realistic and accurate assessment of the trees' condition at the time of inspection, it may have not been appropriate or possible to view all parts or all sides of every tree to fulfil the assessment criteria of a risk assessment.

No tree is entirely safe, given the possibility that exceptionally strong winds could damage or uproot even a mechanically 'perfect' specimen. It is therefore usually accepted that hazards are only recognisable from distinct defects or from other failure-prone characteristics of the tree or the site. Assessment of the potential influence of trees upon buildings or other structures resulting from the effects of trees upon shrinkable load-bearing soils or the effects of incremental root or branch growth, are specifically excluded from this report.

**Un-assessable Risks**

Any alteration to the site boundary could change the current circumstances and may invalidate this report and any recommendations made. A lack of recommended work does not imply that a tree does not pose an unacceptable level of risk and likewise, it should not be implied that a tree will present an acceptable level of risk following the completion of any recommended work.
The Wildlife and Countryside Act (WACA) 1981 (as amended) makes it an offence to disturb nesting birds or recklessly endanger a bat or its roost. Bats are also a European protected species and are additionally protected under the Conservation (Habitats & c) Regulations 1994 and 2010 (as amended).

wrc trees
ARBORICULTURAL CONSULTANTS

# Appendix 4: Tree Location Plan

| SCALE : | DATE : | N |
|---|---|---|
| 1 : 850 @ A4 | 19/12/2023 | |
| MAP FILENAME : Cleeve House V1 | | |

Map data shown may contain Ordnance Survey ® products supplied by Pear Technology Services Ltd; Email: info@peartechnology.co.uk
© Crown Copyright and database rights from date shown above
Ordnance Survey ® licence number 100023148

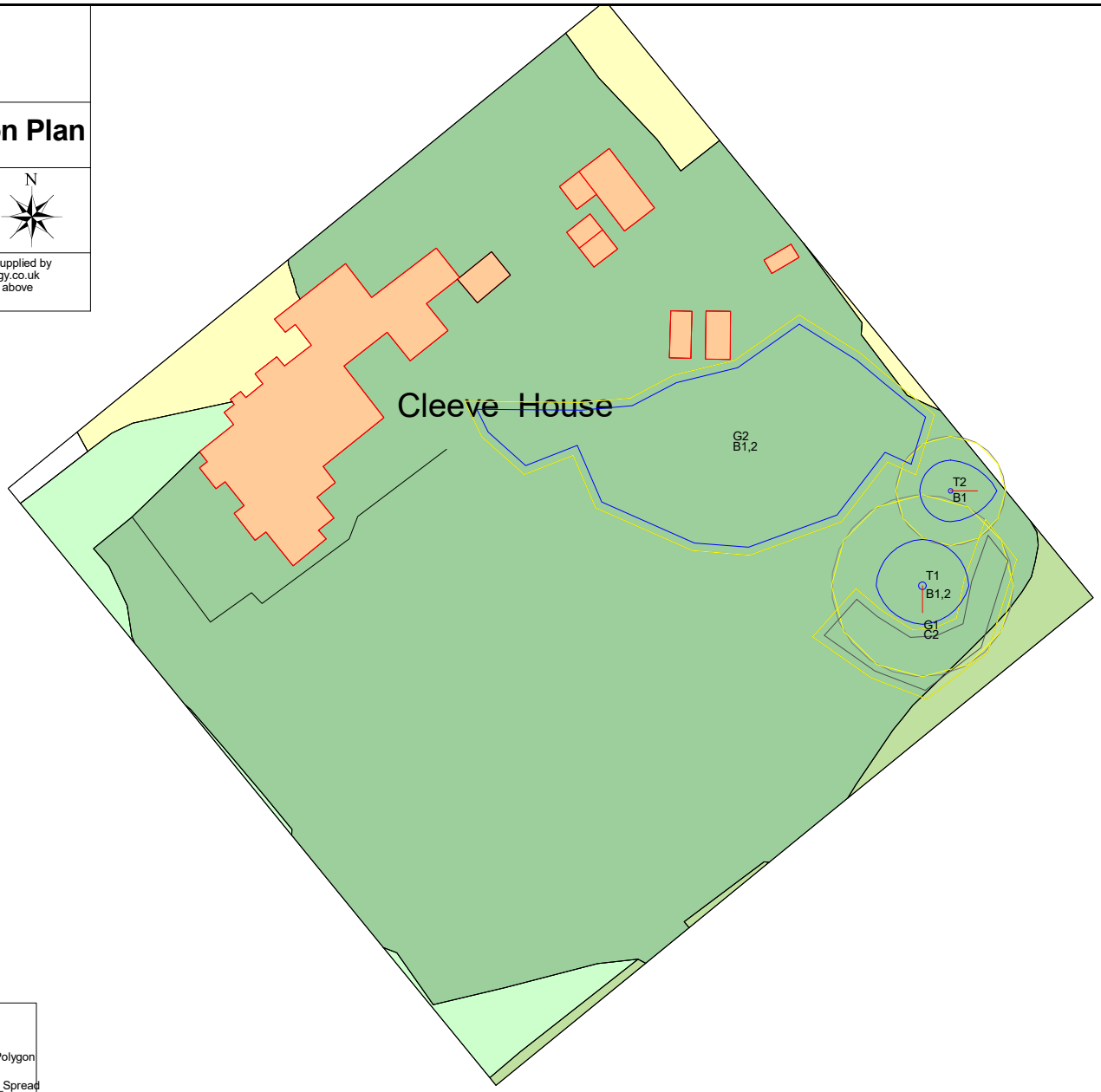


Tree_B_RPA_Polygon
Tree_C_RPA_Polygon
Tree_B_Location
Tree_B_Crown_Spread
Tree_C_Crown_Spread
Tree_B_Reference
Tree_C_Reference

rown copyright and database rights 2023. Ordnance Survey 100023148.