

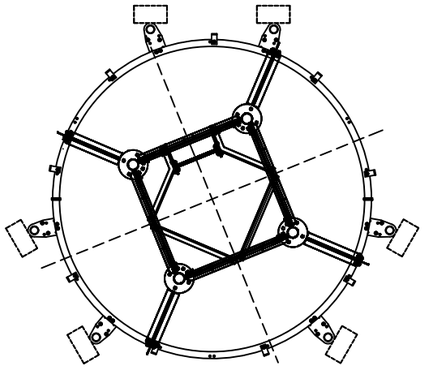

PROPOSED ANTENNA LAYOUT AT 28.80m A.G.L.
(SCALE 1:50)

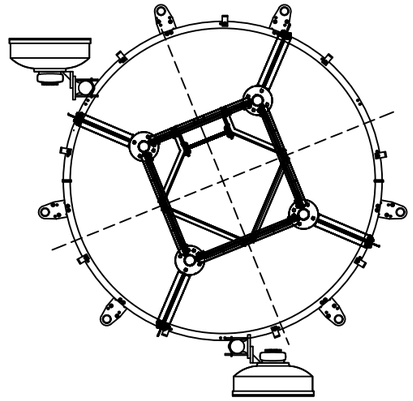

PROPOSED DISH LAYOUT AT 28.80m A.G.L.
(SCALE 1:50)

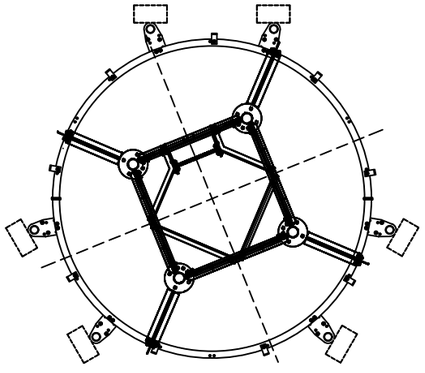

PROPOSED ANTENNA LAYOUT AT 25.40m A.G.L.
(SCALE 1:50)

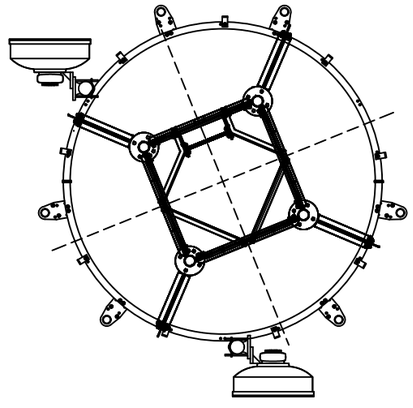

PROPOSED DISH LAYOUT AT 25.40m A.G.L.
(SCALE 1:50)

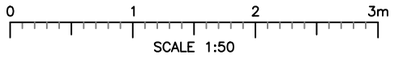

1:1

NOTES:

ANTENNAS AND DISHES ARE SHOWN INDICATIVELY ON PROPOSED STEELWORK

AZIMUTHS T.B.C

REV.	MODIFICATION	BY	CHK.	DATE
A	INITIAL ISSUE	FR	INS	21.11.23

ICON TOWER
INNOVATIVE INFRASTRUCTURE SOLUTIONS

ICON TOWER REF No:
GBR–WIL0005

OPERATOR 1 REFERENCE No.:
N/A

OPERATOR 2 REFERENCE No.:
N/A

SITE NAME AND ADDRESS:
NURDENS GARDEN CENTRE
FESTIVAL WAY
ST. PAUL MALMESBURY WITHOUT, MILBOURNE
WILTSHIRE, SN16 9GN

DRAWING TITLE:
PROPOSED
ANTENNA LAYOUT

PURPOSE OF ISSUE:
PLANNING

DRAWING NUMBER:
400

SURVEYED BY:	ORIGINAL SIZE:	ISSUE:
INS GROUP	A3	A

DRAWN:	DATE:	CHECKED:	DATE:
FR	21.11.23	INS	21.11.23