PROPOSED ELEVATION AND DETAILS FOR GFD-4

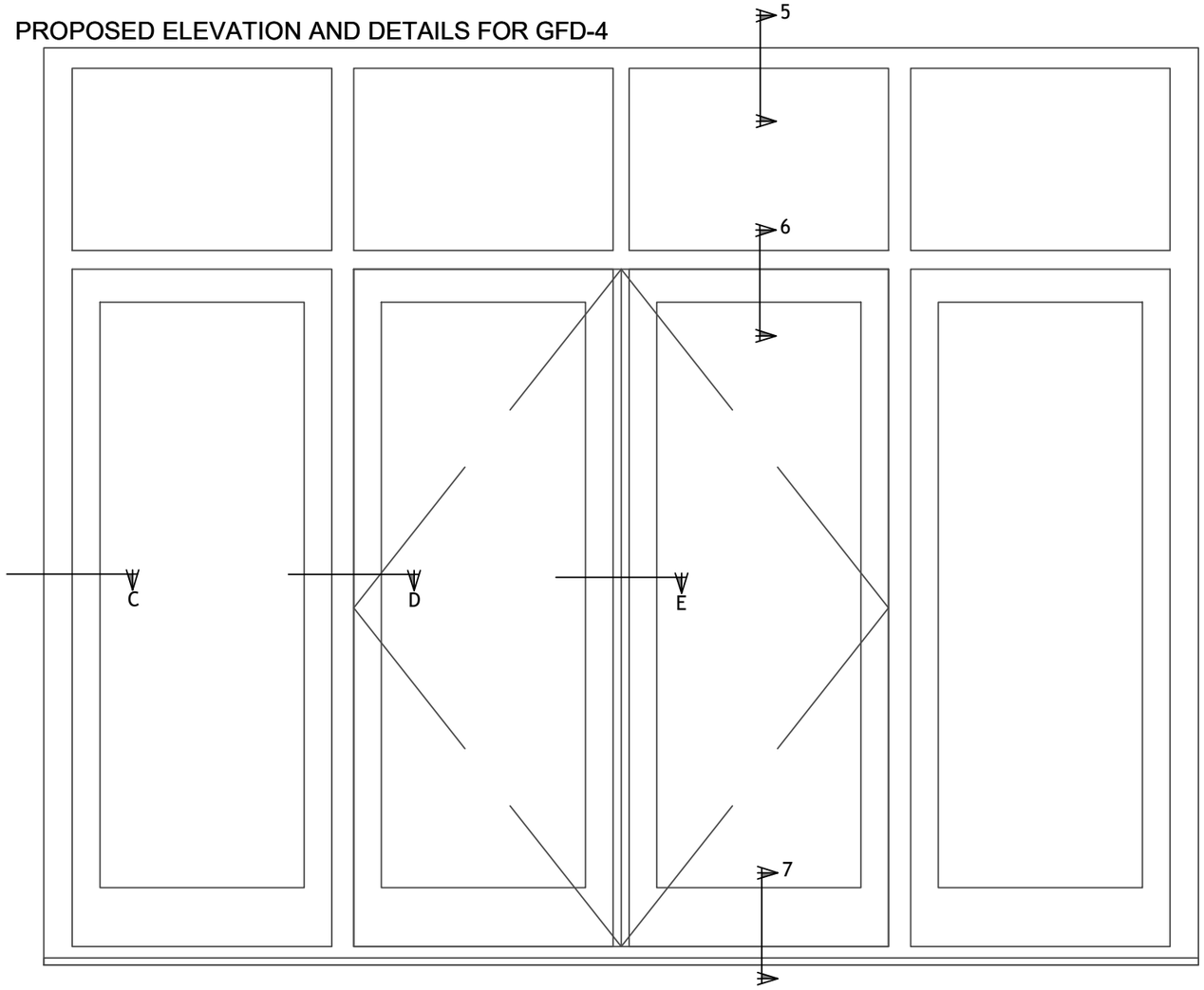


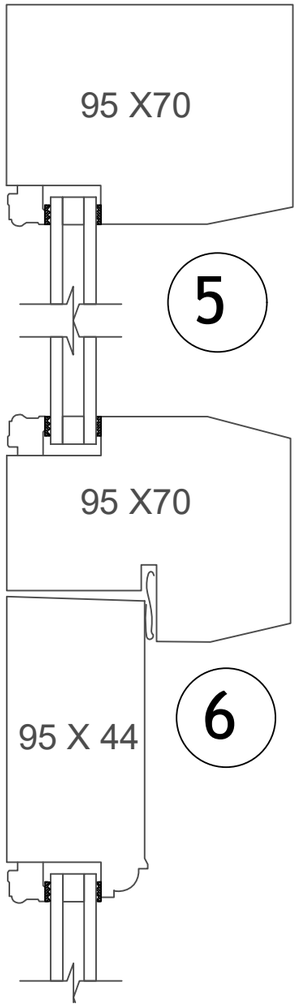


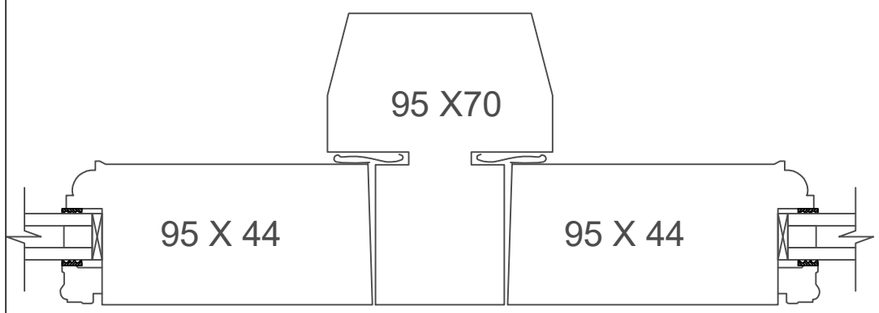


D

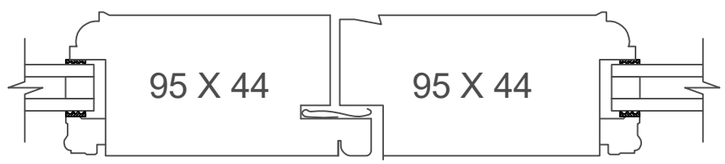


E

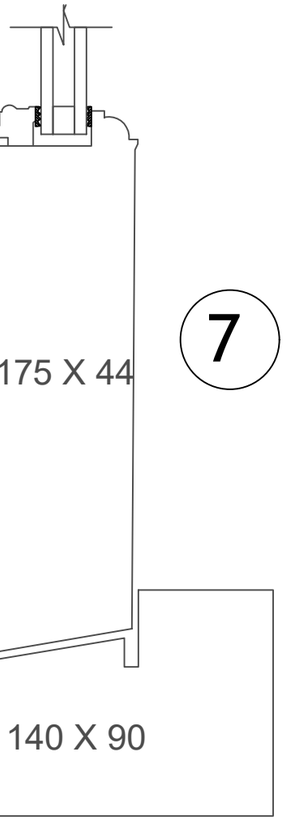


215 PROPOSED TIMBER DOOR DETAILS
19492-215 SCALE 1:20 & 1:2

1:20 0 2

1:2 0 0.2

THE CROFT, GRAFTON ROAD,
WILTON, SN8 3SS

PROPOSED TIMBER DOOR DETAILS

| Scale: 1:20 & 1:2 @ A3 | Drawn by: AS | Date: NOV '23 |
|---|---|---|
| | Drawing Number: 19492-215 | Revision: - |

HBAS Historic Building Advisory Service