PROPOSED ELEVATION AND DETAILS FOR GFD-3 AND TIMBER PLANK SHUTTER

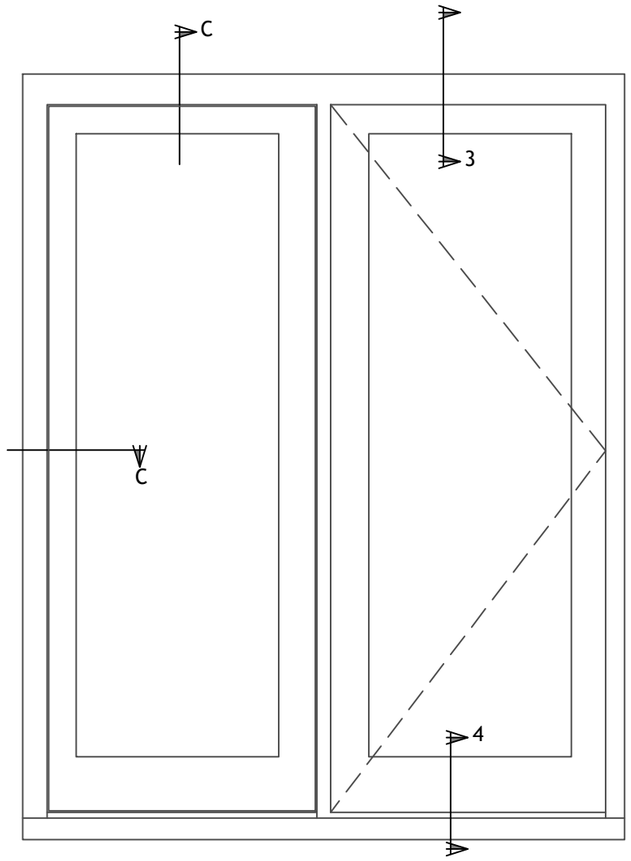

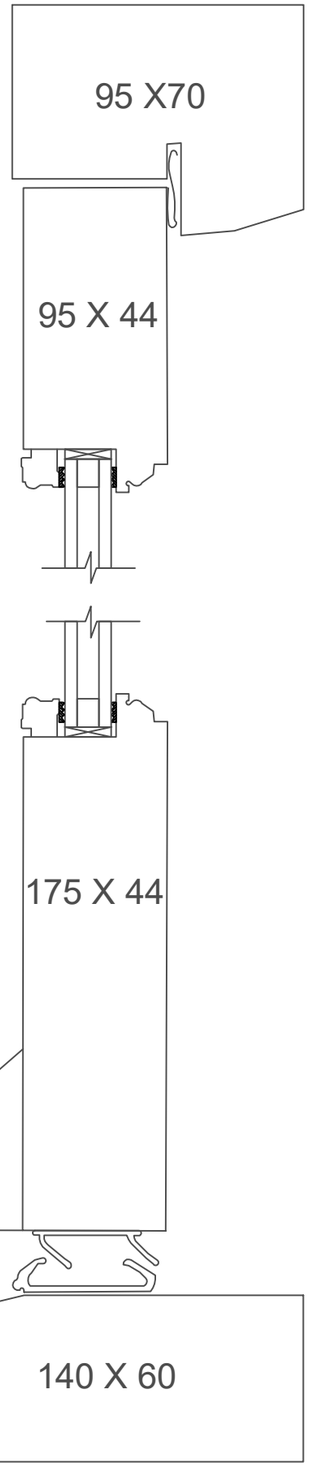

3

4

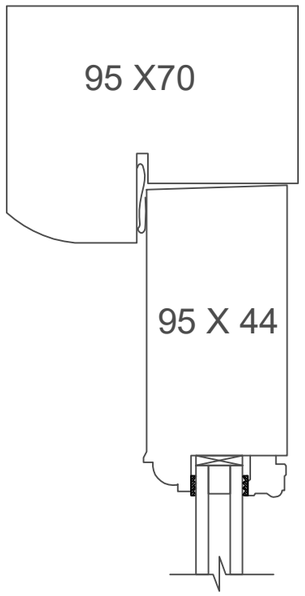

C

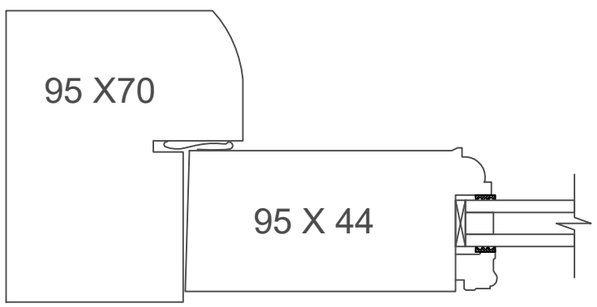

1:20
0
2

1:2
0
0.2

213
19492-213
PROPOSED TIMBER DOOR DETAILS
SCALE 1:20 & 1:2

REV	AMENDMENT	DATE
A	Timber plank shutter elevation shown.	23. 11. 2023

THE CROFT, GRAFTON ROAD,
WILTON, SN8 3SS

PROPOSED TIMBER DOOR DETAILS

Scale:	Drawn by:	Date:
1:20 & 1:2 @ A3	AS	NOV '23
	Drawing Number: 19492-213	Revision: A

HBAS Historic Building Advisory Service