PROPOSED ELEVATION AND DETAILS FOR GFW-1 & GFW-2

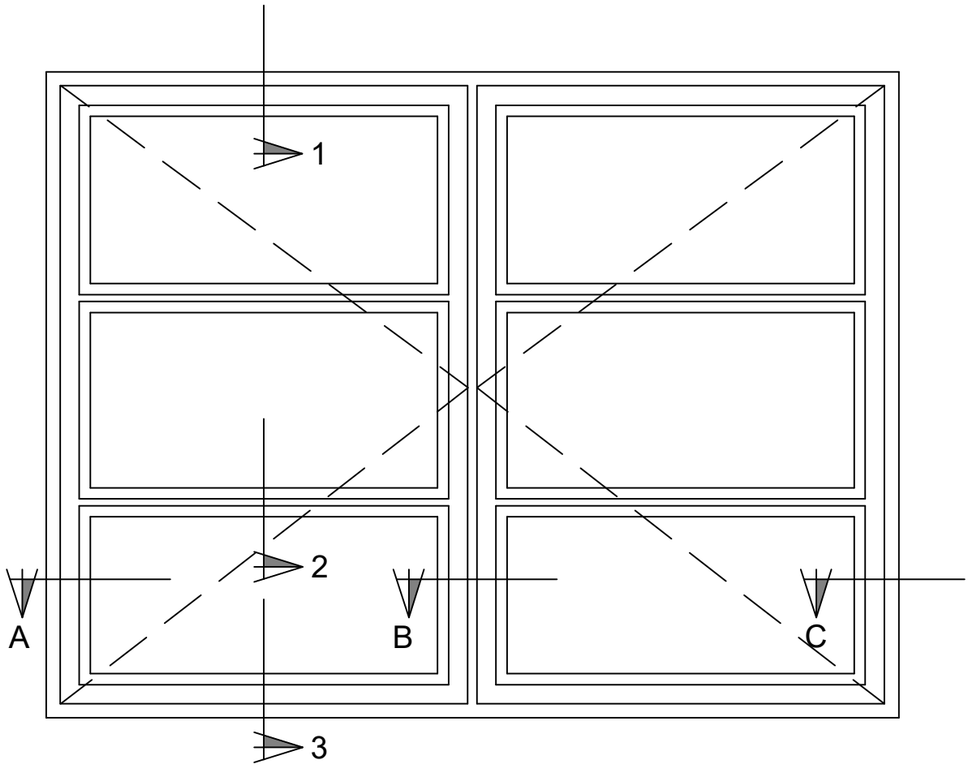

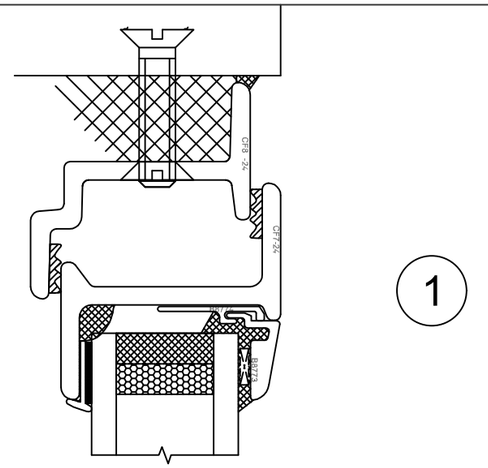

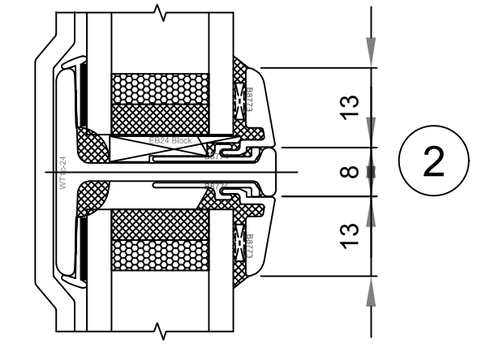

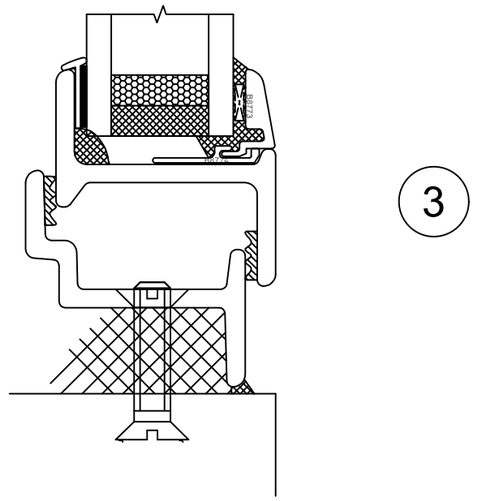

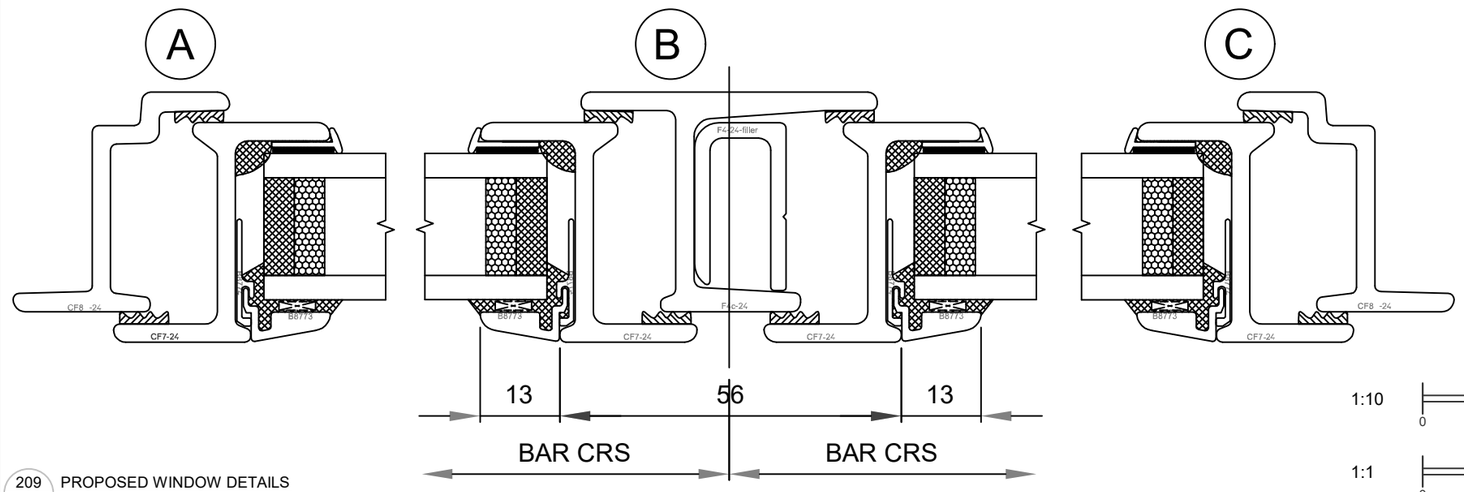

209 PROPOSED WINDOW DETAILS
19492-209 SCALE 1:10 & 1:1

1:10
0 1

1:1
0 0.1

THE CROFT, GRAFTON ROAD,
WILTON, SN8 3SS

PROPOSED CRITTAL WINDOW DETAILS

Scale: 1:10 & 1:1 @ A3	Drawn by: AS	Date: AUG '23
	Drawing Number: 19492-209	Revision: -

HBAS Historic Building Advisory Service