



1:50 scale correct when printed at A1
1:100 scale correct when printed at A3

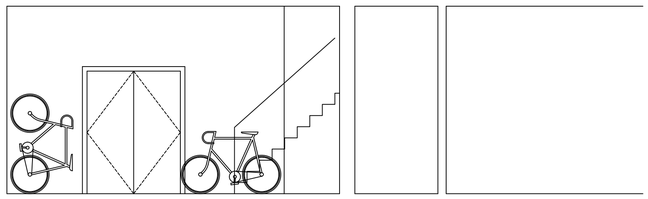

Section - B-B

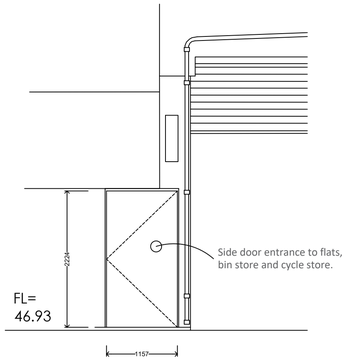

Ground Part West Elevation - A-A

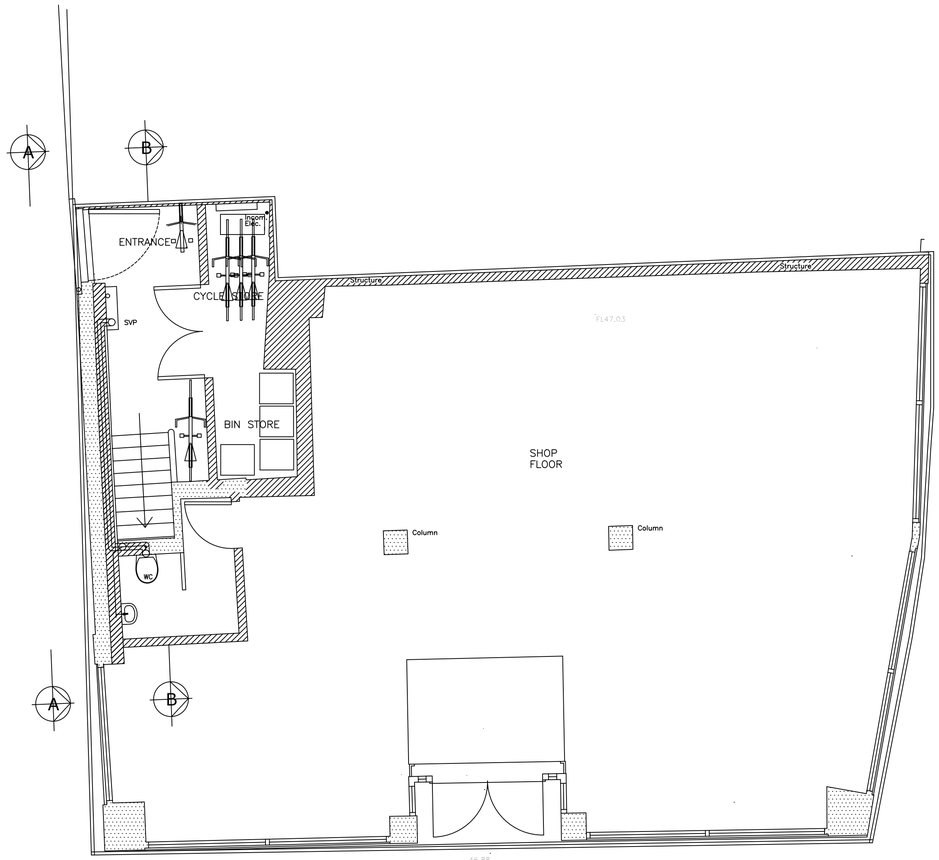

Ground Floor Plan



Universal Ground Cycle Racks

169.28.632 Bicycle Rack for 3 Bikes height 255mm length 720mm width 330mm

Gerald Steer
Chartered Architect
BSc & Arch Hdn Mdn

1 Parsonage Close
Stratford-sub-Castle
Salisbury SP1 3LP

t: 01722 331559

e: gerry@geraldsteer.com

Rev.	Date	Description
A	05.12.23	5 bicycle store provision shown

Do not scale from drawings, use dimensioned figures only and report any discrepancies to the Architect's office.

All rights described in Chapter IV of the Copyright, Design and Patents Act 1988 have been generally asserted. ©

Title: PROPOSED CONVERSION
15 OATMEAL ROW
SALISBURY SP1

Drawing: Ground Floor Plan Showing Bin Store and Cycle Store

Scale: 1:50 @ A1
Drawn: GS
Date: May 2023

Drawing No.: 1277.P.09

Revision: A