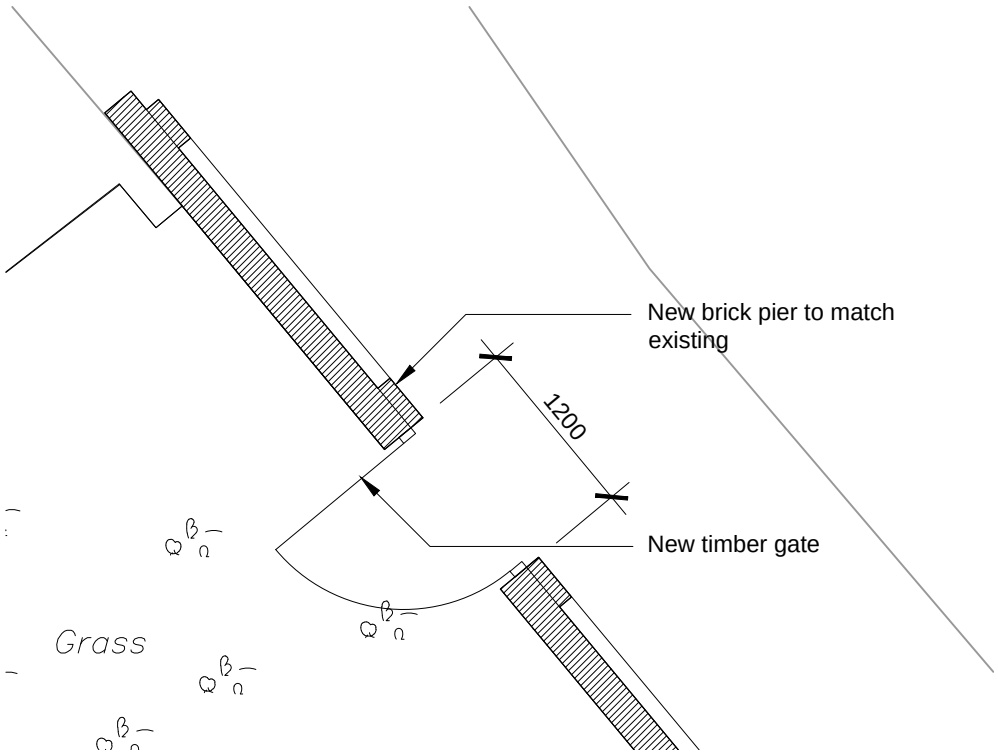

Detailed plan 1
Proposed gate opening and gate

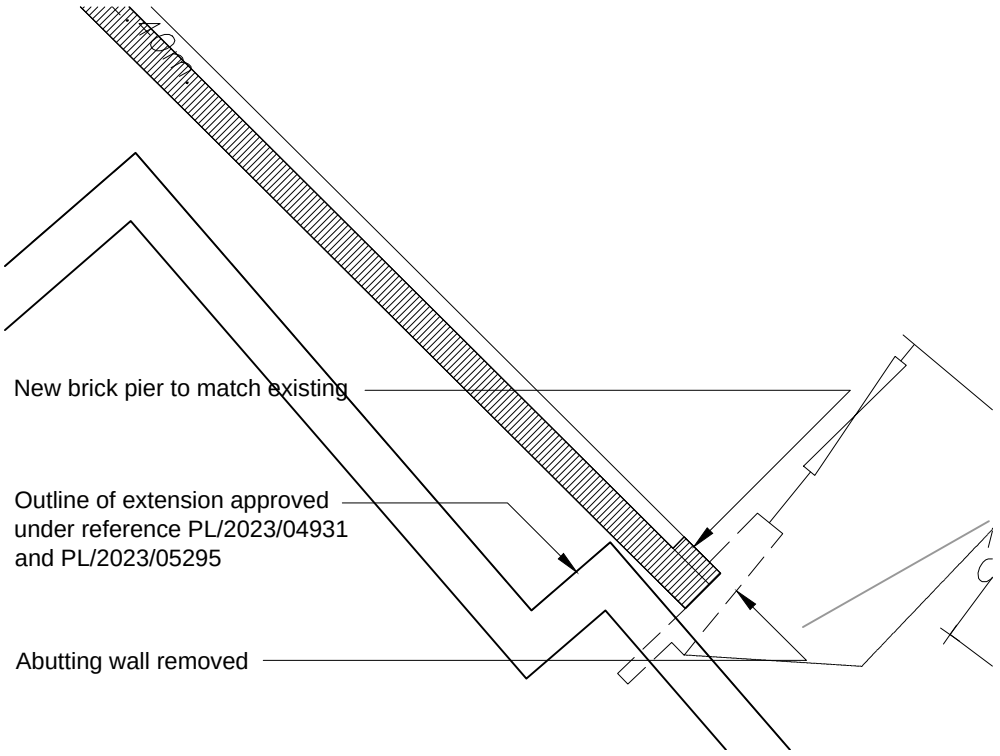

Detailed plan 2
Demolition to abutting wall

0 1 2 3m

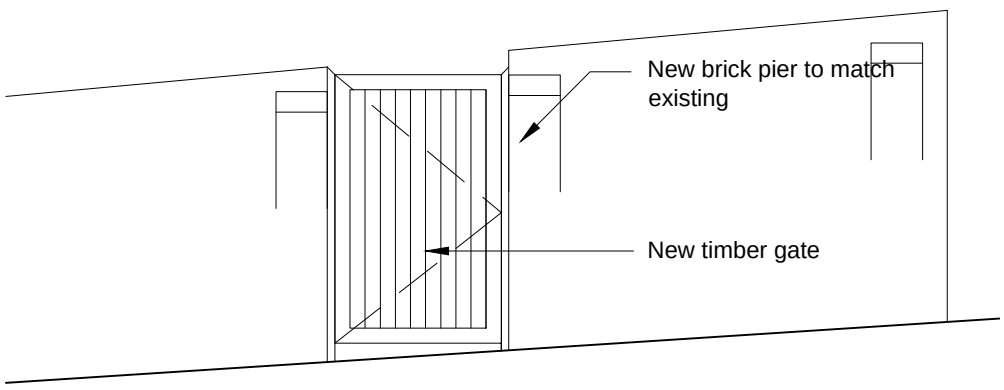

Proposed gate opening and gate
elevation to lane

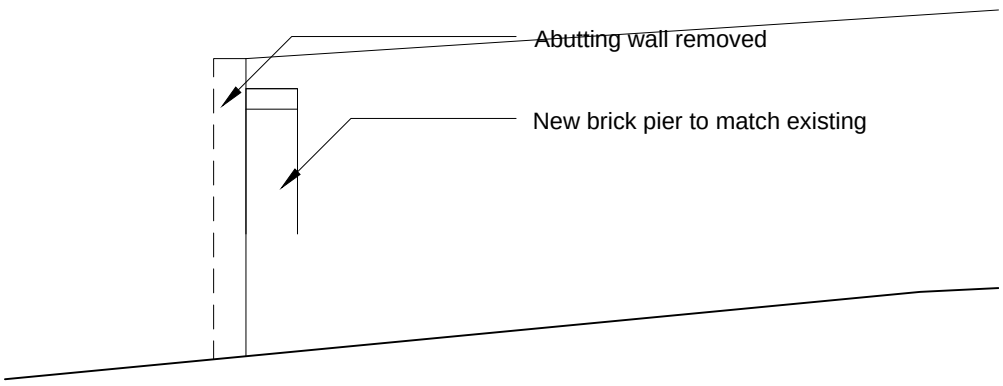

Proposed elevation to lane where
abutting wall removed

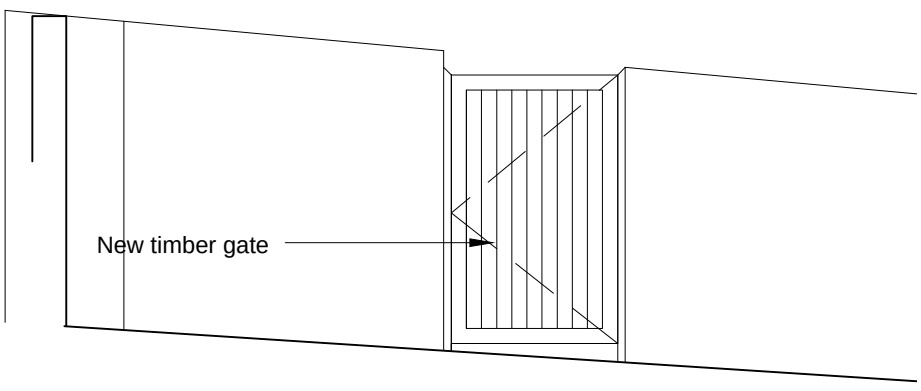

Proposed gate opening and gate
internal elevation

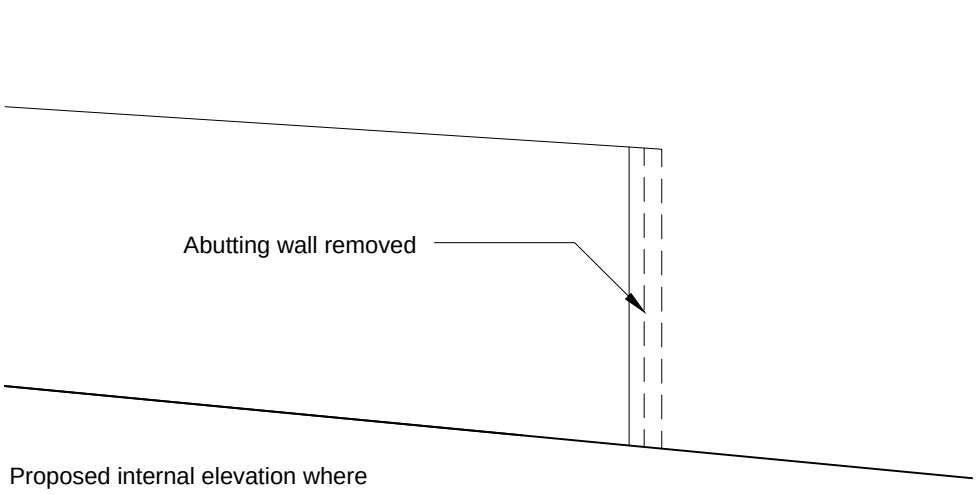

Proposed internal elevation where
abutting wall removed

C3 Design Limited
3 Harestock Road
Winchester
SO22 6NS

T 0845 458 1544

site
Rear of 134-135 High Street
Marlborough SN8 1HN

title
Proposed Plans and Elevations

date
Dec'23

scale
1:50@A3

job
870

drawing no
P06

rev

Rev Date Description

© All rights reserved